Garlock
An ENPRO Company

KLOZURE® Technical Manual

Bearing Isolators & Oil Seals



Introduction

Garlock is the leading manufacturer of bearing protection devices for the heavy duty industrial market. Our broad product line includes radial lip seals, non-contact labyrinth bearing isolators, and mechanical seals.

Garlock is a global company with installations worldwide, solving demanding applications big and small. We believe the best way to service the end user is through our strategic alliances with distribution partners. Our distribution partners are, ultimately, the quickest way to constantly introduce new and innovative products at higher levels of performance and quality - products that will last longer and reduce overall maintenance costs.

With every Garlock seal, you can depend on receiving the backing of every KLOZURE team member and their "can do" attitude, high-quality workmanship, and outstanding pride in a job done right. No matter what your difficult application may be, you can rest assured that Garlock has a solution!

GENERAL SEAL SELECTION

Single lip seals are ideal for the majority of sealing applications. These general purpose seals are available in a wide range of stock sizes.

Split KLOZURE oil seals are designed for easy installation on large shafts without costly equipment tear down for seal replacement.

Dual lip oil seals are recommended for applications requiring the protection from ingress and egress of material, the exclusion of abrasive or foreign materials, and difficult or unusual sealing challenges.

Special purpose oil seals are recommended for high speed applications, reciprocating service, spherical bearings, tapered roller bearings and/or high pressure applications. GUARDIAN, MICRO-TEC II, ISO-GARD, and SGi Bearing Isolators provide superior bearing protection where outstanding contaminant exclusion and ultra long life are desired.

The technical manual contains the most concise, current sealing information to make seal selection easy and accurate, providing reference to applications, shaft speeds, operating temperatures and shaft size. This information permits you to select any Garlock seal for long-lasting, trouble-free service. For online selection, visit: www.garlock.com.

For non-standard applications, please complete an online application data sheet, or contact Garlock for engineering assistance.

TECHNICAL MANUAL - HOW TO USE

The Garlock technical manual is designed to facilitate product selection and to give you the most complete and relevant technical information you can find.

Our product information is organized by product type, with sections for solid, split, excluder, external and specialty type oil seals, as well as our extensive bearing isolator family of non-contact seals.

The general engineering section is designed to offer technical guidance for equipment size and tolerances as well as operational parameters; all the information that will help specify the most effective technology for your application. This section also includes installation instructions with detailed diagrams along with information on troubleshooting and failure analysis to help the user install the Garlock product and solve any potential problems.

KLOZURE® WARRANTY

All merchandise ordered shall be sold subject to SELLER'S standard warranty, viz: SELLER warrants that any product of its manufacture, which upon examination is found by a SELLER'S representative to be defective either in workmanship or material whereby it is not suitable under proper usage and service for the purpose for which designed, will be, at SELLER'S option, repaired or replaced free of charge including transportation charges but not cost of installation providing that SELLER receives written claim specifying the defect within one year after SELLER ships the product. ALL OTHER WARRANTIES EXPRESSED OR IMPLIED INCLUDING ANY WARRANTY OF MERCHANTABILITY ARE HEREBY DISCLAIMED. The foregoing expresses all of SELLER'S obligations and liabilities with respect to the quality of items furnished by it and it shall under no circumstances be liable for consequential damages.

MANUFACTURING FACILITY

The Garlock campus in Palmyra, New York continues to be both the global headquarters and primary manufacturing location for our expansive portfolio of quality sealing solutions, since our company's inception in 1887.

Table of Contents

Oil Seals

KLOZURE OIL SEAL PRODUCT OVERVIEW 8
GENERAL SEAL SPECIFICATIONS 9
LEAD DETECTION 10
APPLICATION PARAMETERS 11
EQUIPMENT INSPECTION AND PREPARATION 13
SOLID SEAL INSTALLATION 14
SPLIT SEAL INSTALLATION 15
EXCLUDER SEALS 16
APPLICATION DATA SHEET 18
OIL SEAL SELECTION GUIDE 19
OIL SEAL CROSS-SECTIONS 20
OIL SEAL PRODUCT CHARTS 21

Bearing Isolators

KLOZURE BEARING ISOLATOR PRODUCT OVERVIEW 26
GENERAL BEARING ISOLATOR SPECIFICATIONS 27
FLOODED VS. NON-FLOODED ILLUSTRATION 28
STANDARDS 29
SHAFT INFORMATION 30
EQUIPMENT PREPARATION 32
SOLID & SPLIT INSTALLATION 33
APPLICATION DATA SHEET 36
BEARING ISOLATOR PRODUCT CHARTS 37
BEARING ISOLATOR SELECTION GUIDE 42
GLOSSARY 45
APPENDIX A - PRODUCT IDENTIFICATION BY MODEL 47
APPENDIX B - PRODUCT IDENTIFICATION BY PREFIX 49
APPENDIX C - OBSOLETE PRODUCT IDENTIFICATION BY MODEL 51
APPENDIX D - CHEMICAL COMPATIBILITY CHART 53
APPENDIX E - OIL SEAL DAMAGE ANALYSIS 60
APPENDIX F - SURFACE SPEED CHART 64

KLOZURE® Oil Seals

INTRODUCTION

When up-time is critical, trust KLOZURE. Each KLOZURE oil seal has been engineered to ensure the longest life and highest performance for the most demanding applications on the planet. The KLOZURE technical manual is a collection of engineering materials to describe the best practices for seal function, application and selection of seals.

- How oil seals and bearing isolators function
- Preparation of equipment to properly use seals
- Installation instructions for various seal designs
- A guide with engineering specifications to select the most appropriate seal
- A glossary of terms, product code descriptions, chemical compatibility and failure analysis references

If questions arise, contact Garlock, 1-800-448-6688 and ask the applications engineering support team for assistance.

OIL SEALS

At the heart of many KLOZURE oil seal, you will find the MILL-RIGHT family of materials. Each of the new MILL-RIGHT elastomers has been specifically engineered to provide the highest abrasion resistance, lowest wear, and exceptional chemical and temperature resistance. The engineered MILL-RIGHT materials and seal designs together, create the most advanced sealing solutions available in the heavy industrial market. With every KLOZURE oil seal, you can depend on longer bearing life, increased productivity, and less maintenance.

To ensure that you are receiving a genuine KLOZURE oil seal with engineered MILL-RIGHT materials, each MILL-RIGHT material is color-coded for easy identification:



ENGINEERING - MILL-RIGHT®

KLOZURE takes great pride in our materials engineering capability. Every day, we are thinking about what can be done differently to enhance our industry leading materials. The launch of the MILL-RIGHT Family of Materials is proof of our continued success and advancement in materials engineering.

All radial lip seals are contact seals; the elastomer of the seal contacts the rotating element of the equipment. As such, the elastomer of the seal will wear away over time. Although the wearing of the elastomer can never be avoided, the elastomer can be engineered to minimize the amount of wear and thus improve the life of the seal. The amount of wear, and abrasion resistance is crucial to end users, as it reflects the quality of the seal and therefore equipment uptime.

TABER ABRASION RESISTANCE

When KLOZURE engineered the MILL-RIGHT Family of Materials, extra emphasis was placed on abrasion resistance. Since KLOZURE already had the most advanced materials available in the heavy duty industrial market, we used our own materials as benchmarks for measuring improvement.

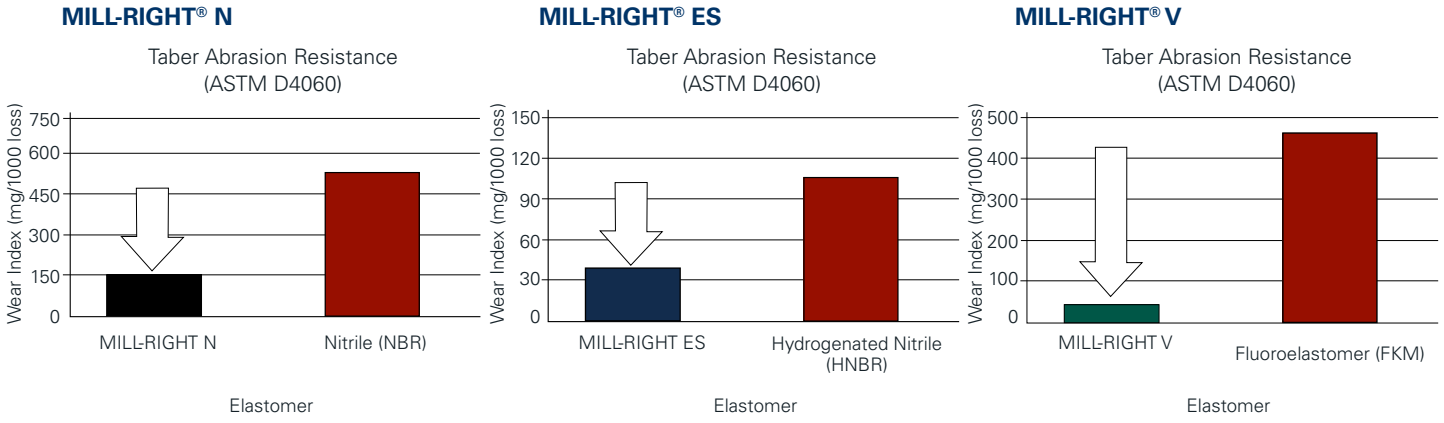

Figure 1 - Taber Abrasion Resistance results for MILL-RIGHT Elastomers

General Specifications

The following general guidelines will help to provide the most robust, efficient and effective sealing system. While generally applicable, they cannot be interpreted to apply to each and every application. For specific application assistance, please contact Garlock KLOZURE Engineering.

OIL SEAL FUNCTION

Oil seals can be described as a type of contact lip seal, specifically designed to retain oil inside a bearing housing. The typical components of an oil seal are shown in Figure 2. The contacting lip does not ride directly on a rotating shaft. It rides on a film of oil called a meniscus, Figure 3. The formation of this meniscus between the sealing lip and the shaft is critical to seal performance. This is what allows some oil seals to operate for months and years with only minor amounts of wear.

Oil seals are also used to retain grease. Grease will reduce friction between the sealing lip and the shaft (relative to the dry state) but will not form a hydrodynamic meniscus to the same degree as oil. Therefore, heat generated due to friction may be present, as shown in Table 1. These values are estimated, and may change based on the application conditions to which the seal is exposed.

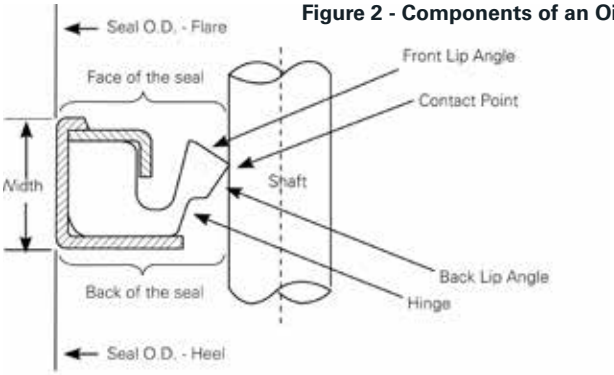

Figure 2 - Components of an Oil Seal

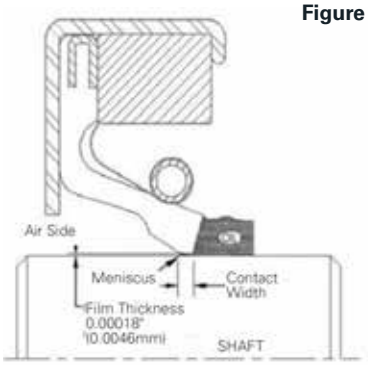

Figure 3 - Oil Seal Meniscus

Lubrication Type	Approximate Temperature Increase*
Well Lubricated (oil)	50 ˚F (10 ˚C)
Partially Lubricated (grease, oil)	100 ˚F (38 ˚C)

* Approximate values, actual temperature change can be different than expressed above

Table 1 - Approximate Temperature Increase due to riction

SHAFT CONDITIONS

The performance of an oil seal is related to the condition of the shaft surface in contact with the sealing member. Rough, poorly finished shafts, or shafts with turning or grinding spirals or "threads," cannot be effectively sealed. New sealing surfaces are required for the replacement oil seal.

Unless otherwise specified, Garlock KLOZURE recommends a minimum shaft hardness of 30 Rockwell C. A shaft hardness of 45 Rockwell C will provide extra protection against damage during handling or assembly.

A plunge ground finish is the most satisfactory method for shafts and sleeves. Garlock KLOZURE recommends 10-20 µ in. Ra (0.25-0.50 µm) with no machine lead, scratches, dents, corrosion, pits, or other surface defects.

Seal Type	Required Hardness	Required Shaft Finish	
	Rockwell C	µ (microinches) Ra	µ (micrometers) Ra
Standard oil seals	30 min.	10-20	0.25-0.50
PS-SEAL	50 min.	4-8	0.10-0.20

Table 2 - Shaft Requirements

SHAFT LEAD

Lead, or spiral grooves, can be generated on a shaft surface by the relative axial movement of the finishing tool (grinding wheel, belt, lathe, etc.) during the finishing operation. The lead on a shaft can adversely affect a radial lip seal, frequently causing severe leakage and seal failure.

LEAD DETECTION

Since it is virtually impossible to manufacture totally lead-free surfaces, the widely used thread method allows lead to be detected and quantified. The procedure for performing this method is described below.

1. Mount the shaft or sleeve in a holding chuck.
2. Lightly coat the shaft or sleeve with a 5 to 10 cps viscosity silicone oil.
3. Check that the shaft or sleeve is level in the assembly. The most accurate results will be achieved when the setup is level.
4. Obtain a length of 100% cotton extra strong quilting thread. A thread of diameter 0.009 inch (0.23mm) is recommended. Unwaxed dental floss may be substituted if necessary.
5. Drape thread over the surface of the shaft and attach a one ounce (28 g) weight at a distance below the shaft. This will create a string-to-shaft contact arc of 220° to 240°.
6. Adjust rotational speed of the machine to 60 RPM.
7. Measure the axial movement of the thread while the shaft or sleeve rotates for a period of 30 seconds.
8. Place the thread at both edges of the shaft as well, to observe for movement in these areas.
9. Reverse the direction of the shaft or sleeve rotation, and repeat test.
10. Compare results to Table 2 for interpretation of lead.

Thread Movement During Clockwise (CW) Rotation	Thread Movement During Counter-Clockwise (CCW) Rotation	Lead Definition
From Fixed End Towards Free End	From Free End Towards Fixed End	Clockwise Lead (Right-Hand) See Figure 4 and Figure 5
From Free End Towards Fixed End	From Fixed End Towards Free End	Counter-Clockwise Lead (Left-Hand) See Figure 6 and Figure 7
No Movement	No Movement	No Measurable Lead
From Fixed End Towards Free End	From Fixed End Towards Free End	Shaft may be tapered. Remount shaft end-for-end. If direction reverses, shaft is tapered
From Free End Towards Fixed End	From Free End Towards Fixed End	Shaft may be tapered. Remount shaft end-for-end. If direction reverses, shaft is tapered
From Fixed End Towards Free End	From Fixed End Towards Free End	Shaft may not be level. Remount shaft end-for-end. If direction does not reverse, shaft is not level
From Free End Towards Fixed End	From Free End Towards Fixed End	Shaft may not be level. Remount shaft end-for-end. If direction does not reverse, shaft is not level
Away From Center	Away From Center	Crowned Shaft
Toward Center	Toward Center	Cusped Shaft

Table 3 - Determination of Lead (Source: RMA Handbook OS-1/1985

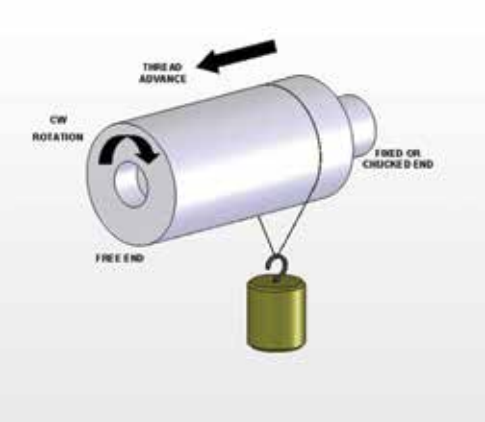

Figure 4 - Clockwise Lead

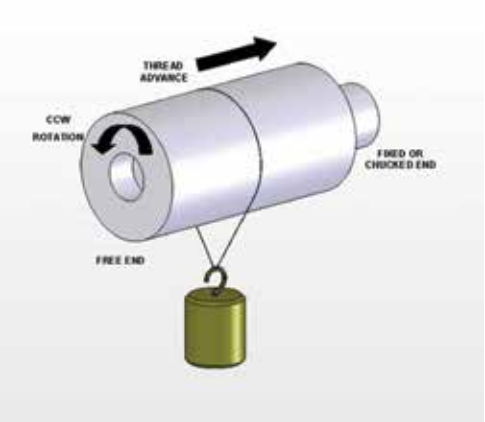

Figure 5 - Clockwise Lead

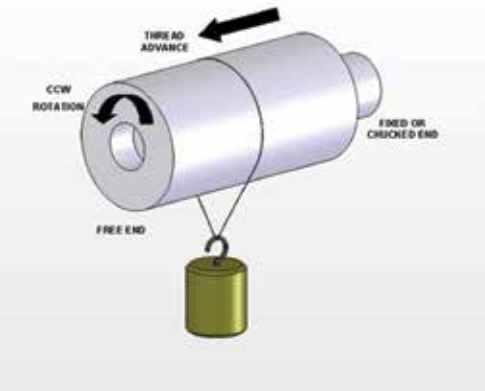

Figure 6 - Counter-Clockwise Lead

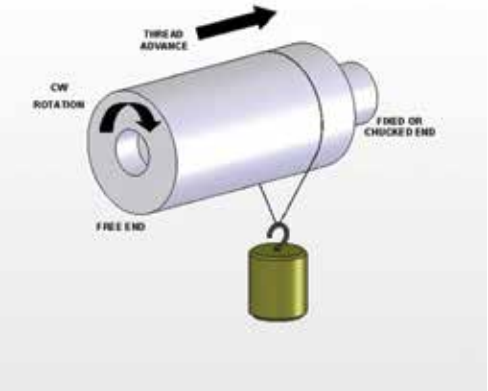

Figure 7 - Counter-Clockwise Lead

COMPARING SHAFT LEAD – LEAD ANGLE

The lead of a shaft can be compared with other shafts of differing diameters by calculating the lead angle. The lead angle is the angle whose tangent is found by dividing the string advance in inches by the product of the shaft circumference, also in inches, and the number of revolutions required to advance the string the measured amount.

$$\text{LEAD ANGLE} = \text{ARCTAN} * \frac{\text{String Advance}}{(\text{Shaft Circumference}) * (\text{Number of Turns})}$$

For example, a string will advance 0.300" in 30 seconds on a 4.000" shaft rotating at 60 RPM. The lead angle will equal 0.0456° = 2' 44.1". A two-inch shaft with the same advance (0.300 inches in 30 seconds at 60 RPM) will have a lead angle of 0.0912° = 5' 28.3".

For optimum seal performance, industry standard recommends that the lead angle of a shaft be 0° ± 0.05° (0' ± 3").

SHAFT-TO BORE MISALIGNMENT

Shaft-to-bore misalignment is defined as the distance by which the shaft is off-center with respect to the bore. This can be simply measured as the distance between the shaft center line and the bore center line. See Figure 8.

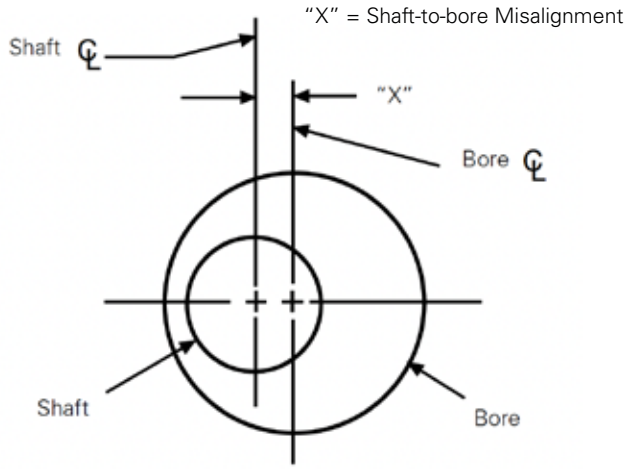

Figure 8 — Shaft-to-bore Misalignment

	Maximum Operating Pressure*		
Seal Type	psi (pounds per sq. in)	kPa (kilopascals)	bar
Standard Oil Seals	7	48	0.48
PS-SEAL®	150†	1,034	10.34

Table 4 — Maximum Pressure Limits by Seal Type

* Maximum operating pressure decreases as surface speed increases. Please consult KLOZURE Engineering for specific application operating pressures.
† Retaining plate required at pressures greater than 75psi.

DYNAMIC RUNOUT

Dynamic runout is defined as the amount by which the shaft (at the sealing surface) does not rotate around the true center. It is measured by the total movement of a dial indicator held against the shaft surface while the shaft is slowly rotated. This is read as total indicator reading, or TIR. See Figure 9.

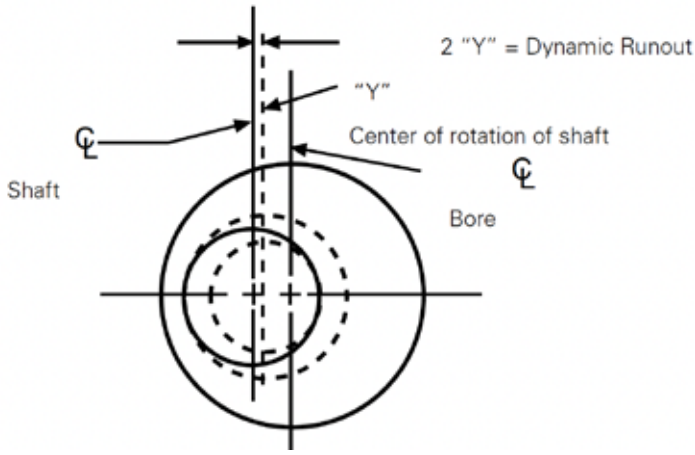

Figure 9 — Dynamic Runout

AXIAL MOTION

Axial motion is movement of the shaft into and out of the bore, referred to as reciprocating motion. Depending on the lip design, some oil seals may not be recommended for reciprocating applications. Refer to Table 13 on page 17 for any reciprocating motion limitations.

PRESSURE

Standard oil seals should not be used when the operating pressure exceeds the limits shown in Table 4 & 5.

When variable surge pressures exceeding the above limits are present, a special condition exists and full details should be submitted for engineering recommendation.

Higher operating pressures may be feasible if a custom seal is considered. However, when a pressure seal is used, features such as the ability to withstand greater eccentricities are sacrificed. Whenever possible, the equipment design should be such that the system is vented. This will allow the seal to function more effectively.

Shaft Speed		Maximum Pressure* Based on Operating Speed		
f/m (feet per minute)	m/s (meters per second)	psi (pounds per sq. in)	kPa (kilopascals)	bar
0 - 1000	0 - 5.1	7	48	0.48
1001 - 2000	5.2 - 10.2	5	34	0.34
2001 & up	10.3 & up	3	21	0.21

Table 5 — Operating Pressure Limits for Standard Oil Seals

* Split KLOZURE oil seals are not recommended for applications involving fluid pressure.

SURFACE SPEED

Safe operating speeds depend on shaft finish, misalignment and runout, type of lubricant, amount of lubricant, pressure, and seal design. As shaft speed increases, these factors become more critical.

The formula for determining surface speed for a particular application is listed below. Alternately, see Appendix G for the surface speed chart.

Surface Speed (f/m) = ShaftDia(in) * RPM * 0.262
Surface Speed (f/m) = ShaftDia(mm) * RPM * 0.0103
Surface Speed (m/s) = ShaftDia(in) * RPM * 0.0013299
Surface Speed (m/s) = ShaftDia(mm) * RPM * 0.0000524

Surface speed limits vary with seal design. Please refer to the product offerings for limits on specific Garlock KLOZURE seals.

UNIT CONVERSIONS

Conversion Formulas		
Multiply	**By**	**To Obtain**
Inch (in)	25.4	millimeter (mm)
millimeter (mm)	0.0394	Inch (in)
bar	100	kilopascal (kPa)
bar	14.504	psi (lb/sq. in)
kilopascal (kPa)	0.010	bar
kilopascal (kPa)	0.145	psi (lb/sq. in)
psi (lb/sq. in)	0.0689	bar
psi (lb/sq. in)	6.895	kilopascal (kPa)

Table 6 — Conversion Formulas

Temperature Conversion Formulas
°F = 1.8 (°C) + 32
°C = (°F - 32)/1.8

Table 7 — Temperature Conversion

* IMPORTANT NOTE *

The recommendations in this catalog as to shaft finishes, misalignment, runout, speeds, temperatures, and tolerances are those generally applicable, but they are not to be interpreted as applying, without reservation or exception, to each and every application. The model and type of seal selected for a given application, and other conditions surrounding that application, may modify these average limitations one way or the other. Therefore, it is desirable in most cases to provide full information to KLOZURE and have our experienced staff of engineers submit a recommendation.

SHAFT AND BORE TOLERANCES

Close tolerances in the finished dimensions of the shaft, in the bore of the housing, and in the oil seal itself are essential to satisfactory seal performance. See Table 8 and 9 for recommended shaft and bore diameter tolerances.

Shaft Diameter		Recommended Tolerance	
Inch	**mm**	**Inch**	**mm**
Up thru 4.000	Up thru 101.60	±0.003	±0.08
4.001 - 6.000	101.61 - 152.40	±0.004	±0.10
6.001 - 10.000	152.41 - 254.00	±0.005	±0.13
10.001 & up	254.01 & up	±0.006	±0.15

Table 8 — Shaft Diameter Tolerance for Oil Seals

Table 9 gives the recommended bore diameter tolerances. These bore tolerances given apply only to housings made from ferrous materials. When non-ferrous materials such as aluminum are used, full details should be submitted for recommendation.

Bore depth (seal width) standard tolerance is ± 0.016" (0.4 mm).

Housing Bore Diameter (Nominal)		Recommended Bore Diameter Tolerance	
Inch	**mm**	**Inch**	**mm**
Thru 1.000	Thru 25.40	±0.001	±0.03
1.001 - 3.000	25.41 - 76.20	±0.001	±0.03
3.001 - 4.000	76.21 - 101.60	±0.0015	±0.04
4.001 - 4.375	101.61 - 111.13	±0.0015	±0.04
4.376 - 6.000	111.14 - 152.40	±0.0015	±0.04
6.001 - 7.000	152.41 - 177.80	±0.002	±0.05
7.001 - 8.000	177.81 - 203.20	±0.002	±0.05
8.001 - 9.000	203.21 - 228.60	±0.002	±0.05
9.001 - 10.000	228.61 - 254.00	±0.002	±0.05
10.001 - 20.000	254.01 - 508.00	+0.002 -0.004	+0.05 -0.10
20.001 - 30.000	508.01 - 762.00	+0.002 -0.006	+0.05 -0.15
30.001 - 40.00	762.01 - 1016.00	+0.002 -0.006	+0.05 -0.15
40.001 - 60.000	1016.01 - 1524.00	+0.002 -0.010	+0.05 -0.25

Table 9 — Housing Bore Tolerances for Oil Seals

EQUIPMENT INSPECTION AND PREPARATION

Prior to the installation of any lip seal, all of the equipment must be thoroughly inspected. The following specifications are critical and must be maintained:

- Shaft Surface Finish, Ra (Roughness Average or AA (Arithmetic Average))
  - For all seals, excluding PS-SEAL or Model 61, the surface finish must be within 10-20µin. (0.25-0.50µm).
  - For PS-SEAL or Model 61, the surface finish must be within 4-8µin. (0.10-0.20µm).
  - For all seals, the surface finish direction must be perpendicular to the shaft axis of rotation.
- Bore Surface Finish, Ra (Roughness Average or AA (Arithmetic Average)
  - For all seals, the surface finish must be equal to or less than 100µin. (2.54µm).
  - For all seals, the surface finish direction must be perpendicular to the shaft axis of rotation.
- Shaft Surface Hardness
  - For all seals, excluding PS-SEAL or Model 61, the surface hardness must be at least 30 Rockwell C. For PS-SEAL or Model 61, the surface hardness must be at least 50 Rockwell C.
- Both the shaft and bore should include an edge relief (preferably an edge chamfer) as shown in Figure 10 & 11. See Tables 10 & 11 for specific values.
- The shaft and bore must be free of any type of defect. Examples of defects would be spiral-machining marks (also known as "machined lead"), burrs, sharp edges (corners), nicks, scratches, indentations, corrosion, etc.
- In most cases, the shaft will have a wear groove created from the previous seals. Care must be taken to ensure the new sealing lip does not seal in the same location.
- When drive features are present, such as a keyway or spline, the drive feature must be covered using an installation tool similar to the one shown in Figure 14, Installation Method D. If the size of the shaft prohibits such a tool, then the following may be used:
  - Polyethylene tape
  - Brass shim stock with smooth edges
  - Wooden plug with smooth edges

A - Shaft Diameter		B - Minimum*	
Inch	mm	Inch	mm
Thru 0.394	Thru 10.00	0.030	0.75
0.395 - 0.787	10.01 - 20.00	0.040	1.00
0.788 - 1.181	20.01 - 30.00	0.050	1.25
1.182 - 1.575	30.01 - 40.00	0.060	1.50
1.576 - 1.969	40.01 - 50.00	0.070	1.75
1.970 - 2.756	50.01 - 70.00	0.080	2.00
2.757 - 3.740	70.01 - 95.00	0.090	2.25
3.741 - 5.118	95.01 - 130.00	0.110	2.75
5.119 - 9.449	130.01 - 240.00	0.140	3.50
9.450 & Up	240.01 & Up	0.220	5.50

Table 10 — Edge Relief for Shafts

*If a shaft lead-in radius is used, maintain the diametral difference to no less than indicated value

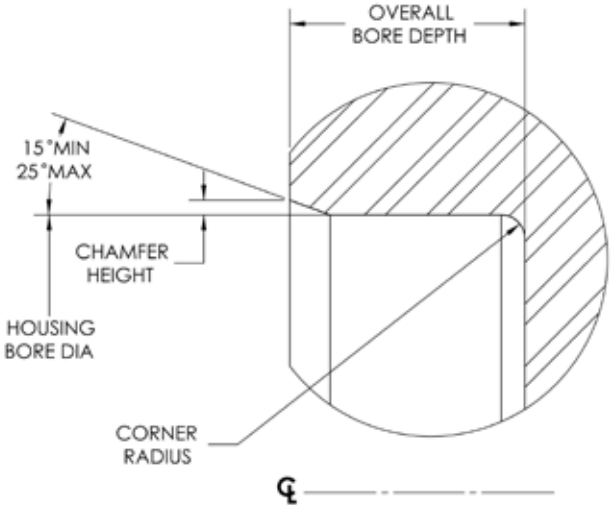

Figure 11 — Housing Bore Dimensions

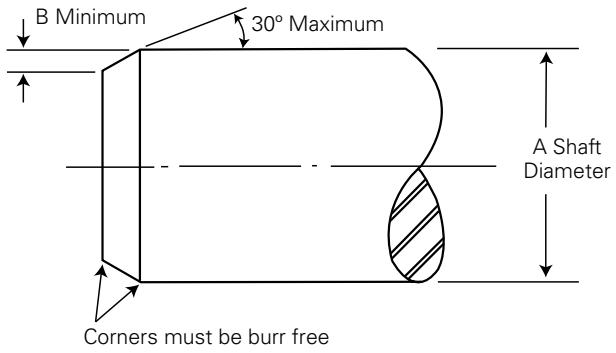

Figure 12 — Shaft Geometry

Bore Diameter		Typical Seal Width		Chamfer Height		Max Corner Radius	
Inch	mm	Inch	mm	Inch	mm	Inch	mm
Thru 4.008	Thru 101.8	0.313 - 0.500	8.0 - 12.8	0.040 - 0.050	1.0 - 1.3	0.020	0.51
4.009 - 5.999	101.8 - 152.4	0.438 - 0.500	11.2 - 12.8	0.050 - 0.060	1.3 - 1.5	0.030	0.76
6.000 - 6.999	152.4 - 177.8	0.500 - 0.625	14.3 - 15.9	0.060 - 0.070	.5 - 1.8	0.030	0.76
7.000 - 7.999	177.8 - 203.2	0.500 - 0.750	12.8 - 19.1	0.060 - 0.080	1.5 - 2.0	0.030	0.76
8.000 - 8.999	203.2 - 228.6	0.625 - 0.875	15.9 - 22.3	0.070 - 0.090	1.8 - 2.3	0.030	0.76
9.000 - 9.999	228.6 - 254	0.625 - 0.875	15.9 - 22.3	0.070 - 0.090	1.8 - 2.3	0.030	0.76
10.000 - 19.999	254.0 - 507.9	0.625 - 1.000	15.9 - 25.5	0.070 - 0.120	1.8 - 3.0	0.040	1.02
20.000 - 29.999	508.0 - 761.9	0.688 - 1.250	17.5 - 31.9	0.080 - 0.130	2.0 - 3.3	0.040	1.02
30.000 - 39.999	762.0 - 1015.9	0.688 - 1.250	17.5 - 31.9	0.080 - 0.130	2.0 - 3.3	0.040	1.02
40.000 & Up	1016.0 & Up	0.688 - 1.250	17.5 - 31.9	0.080 - 0.130	2.0 - 3.3	0.040	1.02

Table 11 — Edge Relief for Housing Bores

NOTE: At least 2/3 of the seal width must be captured in the housing bore, not including chamfer

SEAL INSPECTION

- Refer to Figure 13
- Inspect the sealing lip, looking for any signs of damage. Damage could be in the form of cuts, indentations, nicks, and/or off-register bonds.
- Ensure that the spring (finger or garter type) is properly retained within the seal (bonded or assembled).
- Inspect the seal outside diameter, looking for any signs of damage. Damage could be in the form of indentations, scores, nicks, burrs, and/or cuts (for rubber OD seals).

SOLID SEAL INSTALLATION

Using the application lubricant, apply a thin coating on the seal lip and shaft. Using Figure 14 installation methods, install the seal. For all installation tooling, the diameter (contact area) must not be more than 0.010" (0.254mm) smaller than the bore diameter. If the size of the seal prohibits such a tool, then:

- Use a wooden block (2x4 board or similar) and a mallet to lightly tap the seal into position (you must not strike the seal directly with the mallet as damage may occur). Follow a star pattern (see Figure 12) while tapping the seal into position to prevent "cocking" of the seal.

Place the ends of the board at positions 1 and 2.

- Strike the center of the board with the mallet.
- Rotate the board to the appropriate positions (3 and 4, 5 and 6, 7 and 8).
- Repeat the star pattern as necessary until the seal is fully seated in the housing bore. When the seal is fully seated, the distance from the top surface of the seal to the top controlled surface of the housing must be equal to or less than 0.010" (0.254mm).

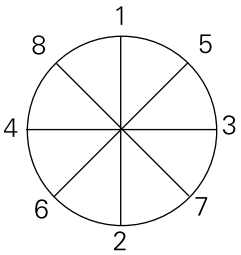

Figure 14 — Star Pattern

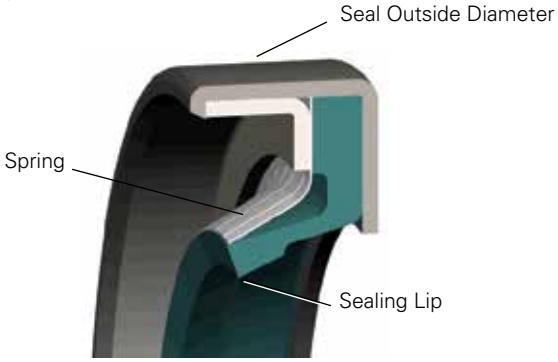

Figure 13 — Seal Cross Section

INSTALLATION METHODS

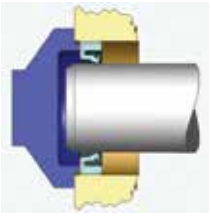

Installation Method A
Thru Bore:
Installation tool bottoms on machined face

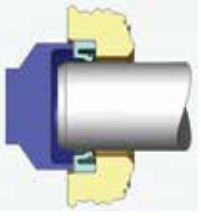

Installation Method B
Blind Bore:
Seal bottoms on machined bore shoulder

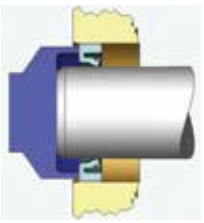

Installation Method C
Thru Bore:
Installation tool bottoms on shaft

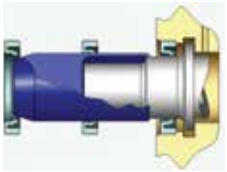

Installation Method D Thru Bore:

Figure 13 — Installation Methods

SPLIT SEAL INSTALLATION

(Ambient Pressure / Non-Flooded Applications Only)

- Using the application lubricant, apply a thin coating on the seal lip and the shaft.
- Split the seal along the axis of rotation, as shown below in Figure 15, and place the seal around the shaft.
- Starting with the split ends, insert the seal into the housing bore. Care must be taken to ensure the split ends of the seal are touching. Split should be placed at 12 o'clock position.
- Continue inserting the seal into the housing bore, working downward on both sides and finishing at the bottom.
- After the seal is fully seated in the housing bore, the seal should protrude from the surface of the housing by 0.015" (0.381mm), as shown in Figure 16. Model 23 only.

* Important note *

The 0.015" protrusion will be built into the width of the seal. The depth of the bore housing should be machined to the seal width specified on the package.

Shaft Diameter	Number of Bolts	"A" Minimum Plate Thickness
3" - 8" (76.2 - 203.2mm)	6	1/8" (3.18mm)
Over 8"	Bolts on max. of 6" (152.4mm) chord, spacing centered about split in end plate	1/4" (6.35mm)

Table 12 — Split Seal Installation

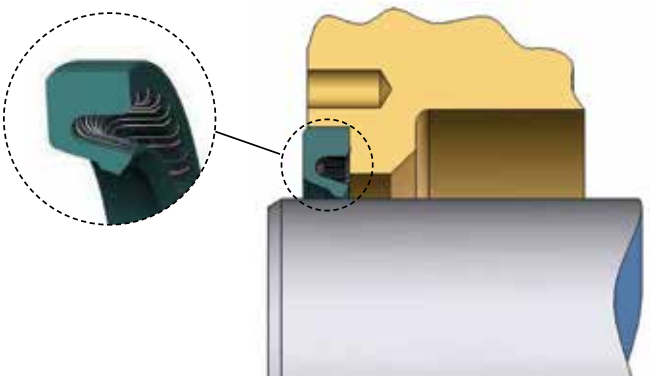

Figure 16 — Split Seal Installed

POST INSTALLATION

Once the seal has been installed, carefully inspect both sealing areas looking for leaks (pay close attention to the area around the sealing lip and the outside diameter of the seal). Also, confirm that the sealing lip is not in the wear groove of the previous seal.



Figure 15 — Split Seal Separation

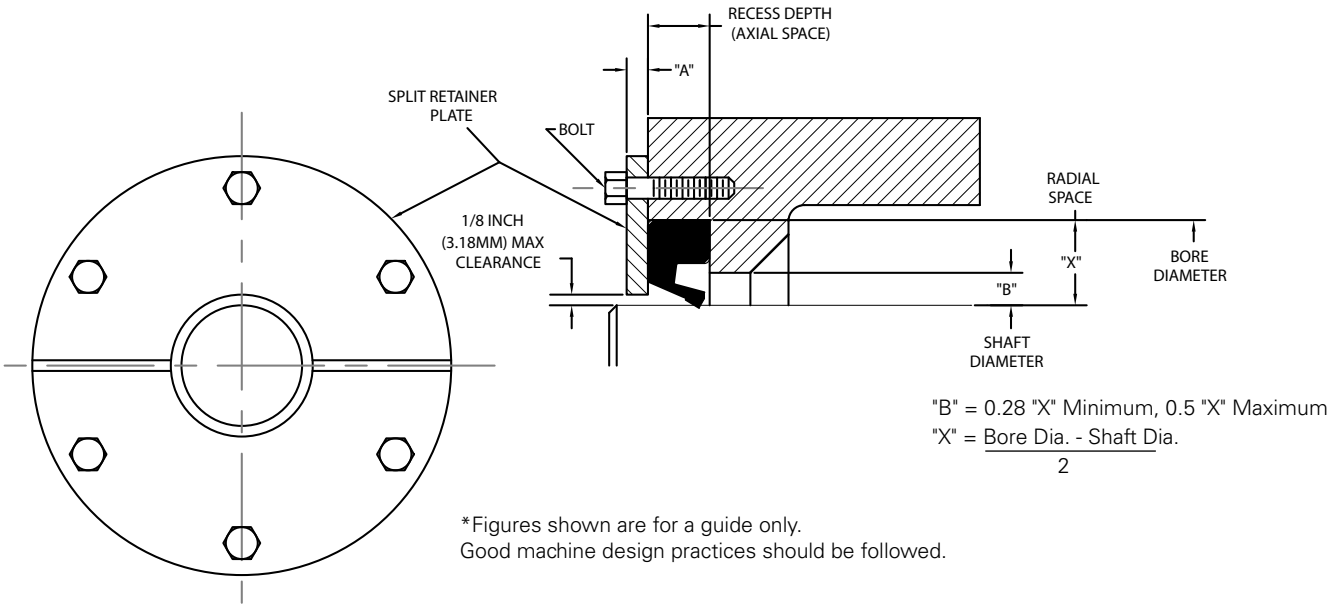

Figure 17 — Standard Split Oil Seal Installation

FACE-TYPE EXCLUDER SEALS

Face seals, sometimes called "flinger seals" or "V-seals," have a significantly different function than typical radial lip seals. While radial lip seals can be used either to retain fluid or exclude contaminants, face seals are solely excluders. The sealing lip engages the surface of the application housing rather than the shaft surface. The inside diameter is statically engaged on the shaft (see figure 18 below).

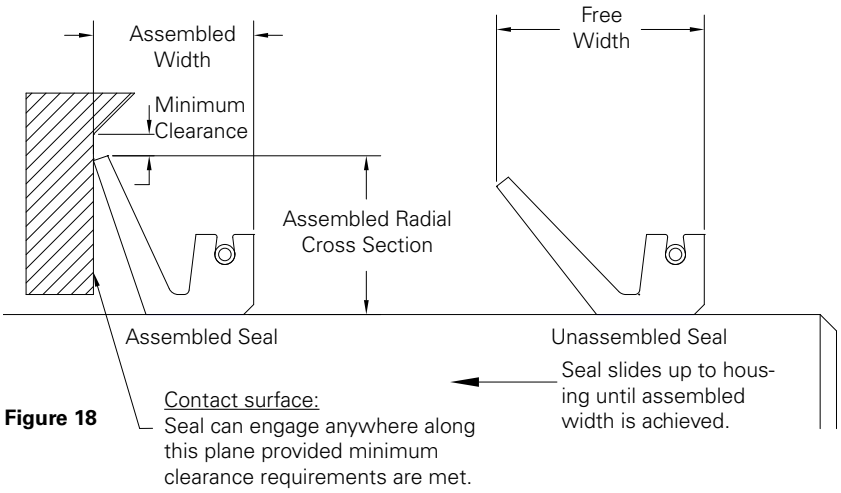

Figure 18

For larger shaft sizes and higher speeds, Models 145A1 and 145A2 are available as shown in Figure 19. Each seal is specified by a range of shaft sizes that it will fit. The assembled radial cross-section and width is consistent to each model regardless of shaft size.

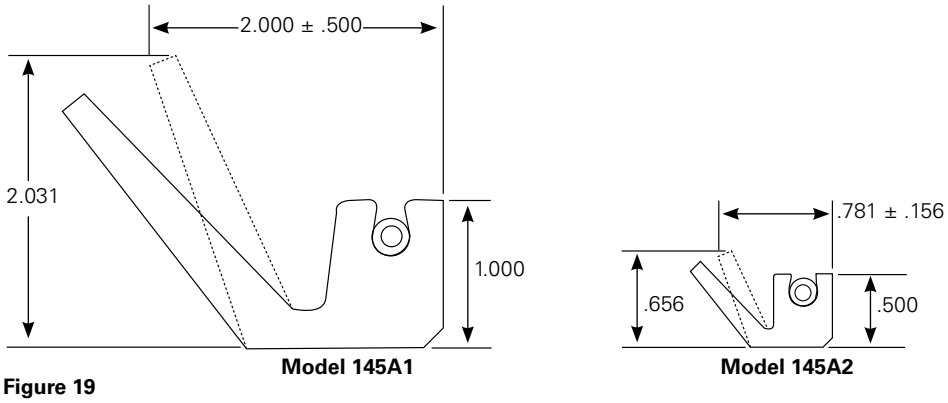

Figure 19

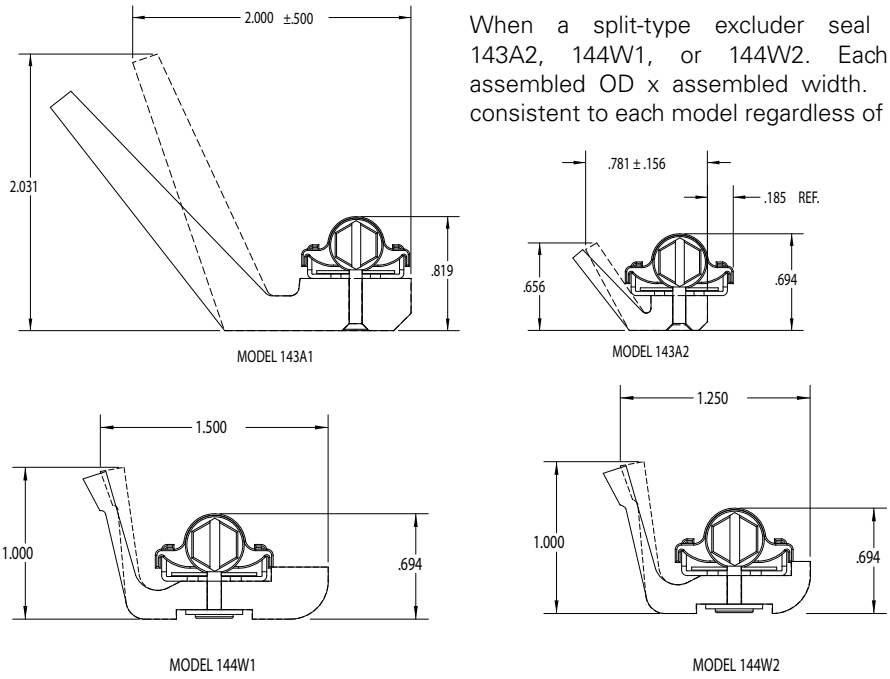

When a split-type excluder seal is desired choose from the Model 143A1, 143A2, 144W1, or 144W2. Each seal is specified by a specific shaft x assembled OD x assembled width. The assembled radial cross-section and width is consistent to each model regardless of shaft size, Figure 20.

Figure 20

DIMENSIONAL DATA FOR VARIOUS MODEL FACE SEALS IS SHOWN BELOW, FIGURE 22

Figure 21

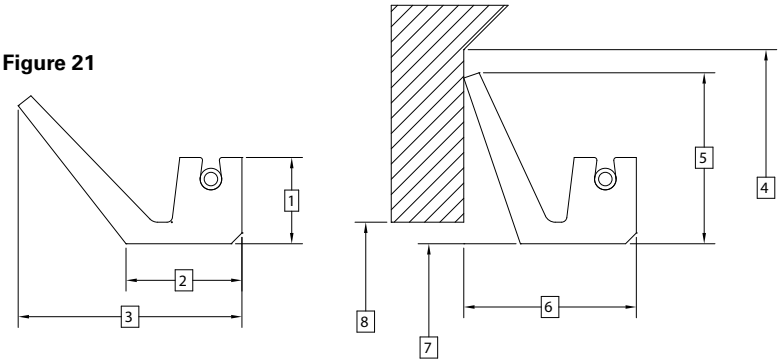

		SPLIT				SOLID	
DIM#	**Description**	**Model 143A1**	**Model 143A2**	**Model 144W1**	**Model 144W2**	**Model 145A1**	**Model 145A2**
1	Heel / Clamp height	0.819" (20.8mm)	0.694" (17.6mm)	0.694" (17.6mm)	0.694" (17.6mm)	1.000" (25.4mm)	0.500" (12.7mm)
2	Shaft contact width	1.344" (34.1mm)	0.563" (14.3mm)	1.331" (33.8mm)	1.081" (27.5mm)	1.344" (34.1mm)	0.563" (14.3mm)
3	Overall free width	2.594 (65.9mm)	0.969" (24.6mm)	1.614" (41.0mm)	1.362" (34.6mm)	2.594" (65.9mm)	0.969" (24.6mm)
4	Minimum face diameter	Shaft + 4.500 (114.3mm)"	Shaft + 1.750" (44.5mm)	Shaft + 2.438" (61.9mm)	Shaft + 2.438" (61.9mm)	Shaft + 4.500" (114.3mm)	Shaft + 1.750" (44.5mm)
5	Assembled x-section	2.031" (51.6mm)	0.656" (16.7mm)	1.000" (25.4mm)	1.000" (25.4mm)	2.031" (51.6mm)	0.656" (16.7mm)
6	Assembled width	2.000 ± 0.500" (50.8 ± 12.7mm)	0.781 ± 0.156" (19.8 ± 4.0mm)	1.500 ± 0.062" (38.1 ± 1.6mm)	1.250 ± 0.062" (31.8 ± 1.6mm)	2.000 ± 0.500" (50.8 ± 12.7mm)	0.781 ± 0.156" (19.8 ± 4.0mm)
7	Shaft diameter	Application Dependent	Application Dependent	Application Dependent	Application Dependent	Application Dependent	Application Dependent
8	Maximum face bore	Shaft + 1.000" (25.4mm)	Shaft + 0.391" (9.9mm)	Shaft + 1.000" (25.4mm)	Shaft + 1.000" (25.4mm)	Shaft + 1.000" (25.4mm)	Shaft + 0.391" (9.9mm)

Table 13 — Dimensional Data

GARLOCK KLOZURE OIL SEAL APPLICATION DATA SHEET

Date:

CONTACT INFORMATION

Company: Distributor End User

Contact Name: Location:

Phone: Email:

DIMENSIONS

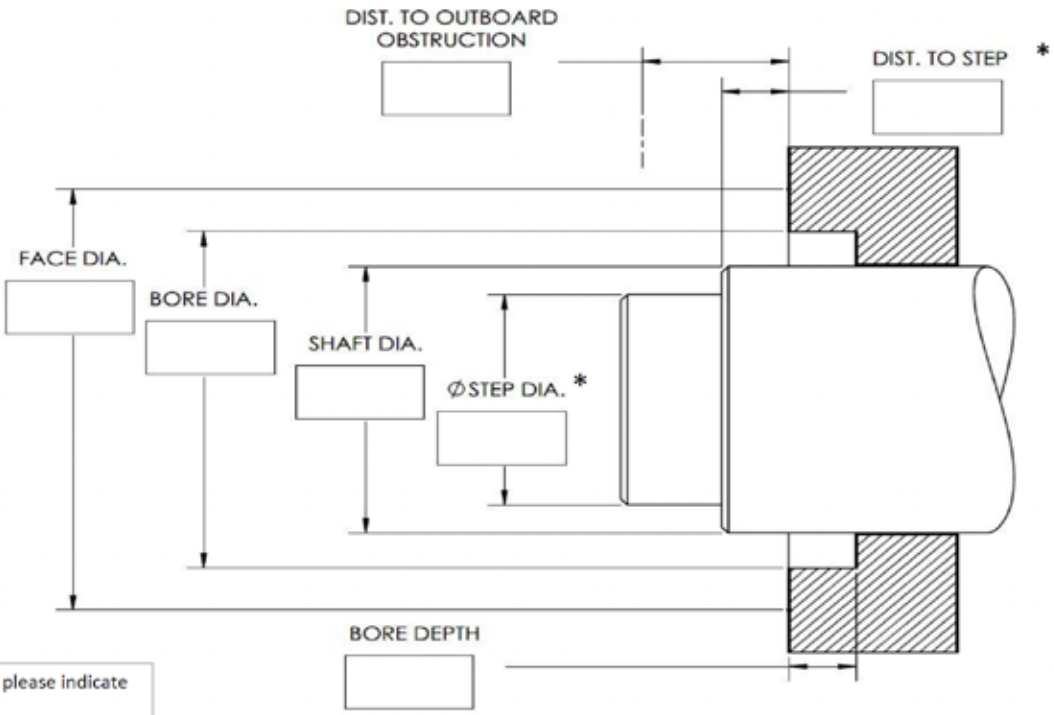

* If shaft does not have a step, please indicate "N/A" in the applicable fields.

CURRENT SEAL INFORMATION

Seal Manufacturer:

Seal Part Number:

Seal Type:

Seal Element Material:

Seal Case Material:

Approx. Cost:

Approx. Usage:

APPLICATION

Equipment Type:

Shaft Orientation: Vertical Horizontal

Function of Seal: Retain Exclude Both

MOTION

Shaft Motion: Rotating Reciprocating Both Stationary

Housing Motion: Rotating Stationary

Shaft Speed: rpm fpm m/s

Housing Speed: rpm fpm m/s

ALIGNMENT/MOVEMENT

Radial Misalignment: in mm

Shaft Runout: in mm

Axial Movement: in mm

TEMPERATURE

Nominal: °F °C

Minimum: °F °C

Maximum: °F °C

MEDIA

Internal: Grease Oil Oil Mist

Level: Dry Partial Shaft Submerged

External: Dirt/Dust Water Washdown

Rolling Solution None

PRESSURE

Location: Internal External

Pressure Value: psi bar

OTHER APPLICATION INFORMATION

TABLE 14 — OIL SEAL SELECTION GUIDE*

	Shaft Size				Type of Motion		Speed (FPM)						Max Radial Misalignment (inches)						Max Diff. Pressure			Media Level			Seal Material**				
Seal Type	0-3 Inches	3-6 Inches	6-12 Inches	Over 12 Inches	Rotary	Reciprocating	0-1000	1000-2000	2000-3000	3000-5000	5000-7000	7000-12000	0.010	0.015	0.020	0.093	0.100	0.125	0 psi	7 psi	150 psi	Below Shaft	Half Shaft	Fully Submerged	MILL-RIGHT N	MILL-RIGHT ES	MILL-RIGHT V	Silicone	GYLON
Model 23		X	X	X	X		X	X					X						X			X	X		X	X	X	X	
Model 26 (solid)	X	X	X	X	X	X	X	X	X	X			X	X					X	X		X	X	X	X	X	X		
Model 26 (split)	X	X	X	X	X	X	X	X	X	X			X	X					X			X	X		X	X	X		
Model 53		X	X	X	X		X	X	X				X	X					X	X		X	X	X	X	X	X	X	
Model 57	X	X	X		X	X	X						X						X	X		X	X	X	X	X	X	X	
Model 58[2]	X	X	X		X	X	X						X						X	X		X							
Model 59			X	X	X	X	X	X	X	X			X	X	X	X			X	X		X	X	X	X	X	X		
PS-SEAL® (61)	X	X	X		X	X	X	X					under 0.005	under 0.005	under 0.005	under 0.005			X	X	X	X	X	X					X
Model 64			X	X	X		X	X	X	X	X		X	X	X	X	X	X	X	X		X	X	X	X	X	X	X	
Model 87			X	X	X	X	X	X	X	X			X	X	X	X	X		X	X		X	X	X	X	X	X		
Model 143[1]			X	X	X		X	X	X	X			N/A	N/A	N/A	N/A	N/A	N/A	N/A	N/A	N/A	N/A	N/A	N/A					
Model 144				X	X		X	X	X				N/A	N/A	N/A	N/A	N/A	N/A	N/A	N/A	N/A	N/A	N/A	N/A	X	X	X		
Model 145[1]			X	X	X		X	X	X	X			N/A	N/A	N/A	N/A	N/A	N/A	N/A	N/A	N/A	N/A	N/A	N/A					

*The values shown are generally applicable limits. Please consult KLOZURE Engineering for specific application assistance.
**Seal Materials shown are typical. Other materials may be available upon request. For more information please contact KLOZURE Engineering
[1]Model 145 & 143 Face Seals are not available in MILL-RIGHT materials but are supplied in standard NBR, HNBR & FKM materials.
[2]Model 58 seal manufactured with ThermoCeram sealing element.

TABLE 15 — MATERIAL SELECTION GUIDE*

Material Type#	Color	Durometer	Coefficient of Friction	Operating Temperature	Max Spike Temperature	Abrasion Resistance	Chemical Resistance	Comparative Cost
MILL-RIGHT N	Black	80	1.788	-40°F to 200°F (-40°C to 93°C)	250°F (123°C)	Moder-ate	Moderate	Low
MILL-RIGHT ES	Dark Blue	88	1.053	-40°F to 300°F (-40°C to 150°C)	350°F (177°C)	High	Improved	Moderate
MILL-RIGHT Black	Black	74	1.845	-40°F to 300°F (-40°C to 150°C)	350°F (177°C)	Moder-ate	Improved	Moderate
MILL-RIGHT V	Green	76	1.158	-22°F to 400°F (-30°C to 204°C)	450°F (232°C)	High	Very Good	High
Silicone	Light Blue (FDA - Red)	82	Over 2.000	-75°F to 350°F (-59°C to 177°C)	400°F (204°C)	Low	Excellent	High
GYLON	Black (FDA - White)	N/A	0.100	-120°F to 400°F (-84°C to 204°C)	450°F (232°C)	High	Excellent	High

*The values shown are generally applicable limits. Please consult Garlock Engineering for specific application assistance.
#Seal Materials shown are typical style materials for oil seals. Other materials may be available upon request. For more information please contact Garlock Engineering.

SHELF LIFE FOR KLOZURE® OIL SEALS

Radial lip type seals should be stored with caution. The service life of bearings and other costly machined parts may depend upon how well the sealing component is stored. Hazards which may be encountered include: temperature, ozone, humidity, radioactive materials, fumes, insects, rodents, dust, grit and mechanical damage. The storage area should be cool (60 - 90°F) and with average (40 – 70%) humidity. Seals should be stored on a first-in/first-out basis, since even under ideal conditions, an unusually long shelf life may cause deterioration of component materials.

MATERIAL SHELF LIFE

Material	Shelf Life
MILL-RIGHT N / NBR	5 YEARS
MILL-RIGHT ES / HNBR	7 YEARS
MILL-RIGHT V / FKM	10 YEARS
SILICONE / VMQ	10 YEARS
GYLON and PTFE	INDEFINITE

REFERENCE DIMENSIONS

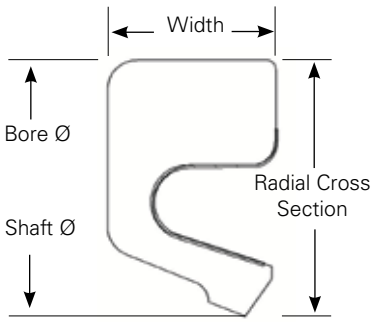

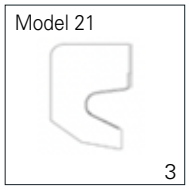

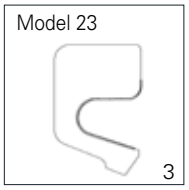

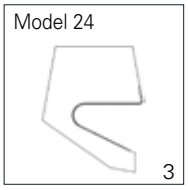

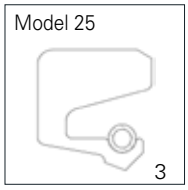

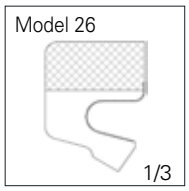

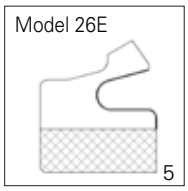

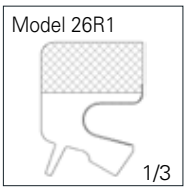

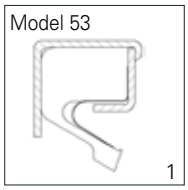

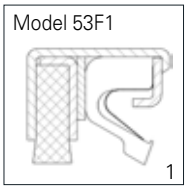

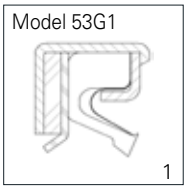

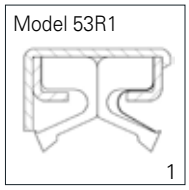

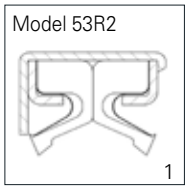

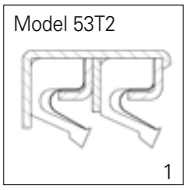

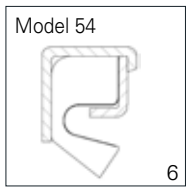

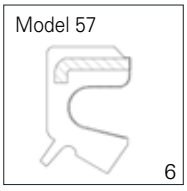

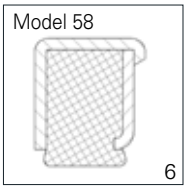

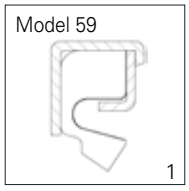

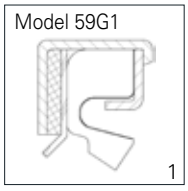

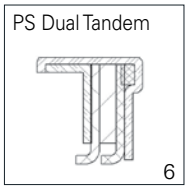

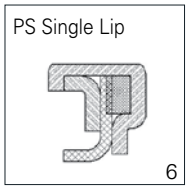

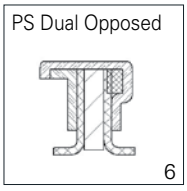

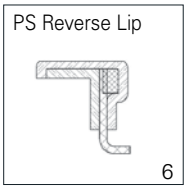

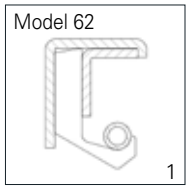

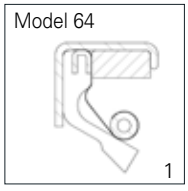

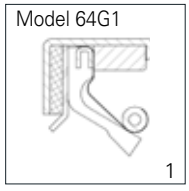

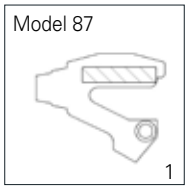

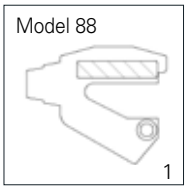

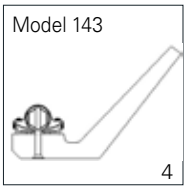

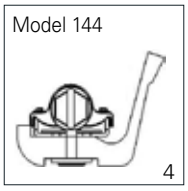

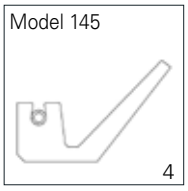

Seal Type Key

1. Solid Assembled & Molded
2. Solid Bonded
3. Split
4. Excluder
5. External
6. Specialty

Solid	Features	Materials	Temp	Shaft Diameter in. (mm)	Surface Speed	Spring Type	Misalign. in. @ f/m (mm@m/s)	Pressure
Model 26 	• High-performance seal • Solid or split design • Reverse bevel lip design prevents lip rollover • Reinforced rubber O.D. • Single and dual lip configurations available	• MILL-RIGHT N	-40°F (-40°C) to 200°F (93°C)	0.750 to 60.000 (19.0 to 1524.0)	5,000 f/m (25.4 m/s)	Molded-in stainless steel finger	0.015 @ 1,000 (0.38 @ 5.1) 0.010 @ 2,000 (0.25 @ 10.2) 0.008 @ 5,000 (0.20 @ 25.4)	To 7 psi (0.4 bar) (N/A if split)
		• MILL-RIGHT BLACK • MILL-RIGHT ES	-40°F (-40°C) to 300°F (150°C)					
		• MILL-RIGHT V	-22°F (-30°C) to 400°F (204°C)					
Model 26R1 	• High-performance dual lip seal • Reverse bevel lip design prevents lip rollover • Dust lip prevents ingress of light contaminants	• MILL-RIGHT N	-40°F (-40°C) to 200°F (93°C)	0.750 to 60.000 (19.05 to 1524.0)	5,000 f/m (25.4 m/s)	Molded-in stainless steel finger	0.015 @ 1,000 (0.38 @ 5.1) 0.010 @ 2,000 (0.25 @ 10.2) 0.008 @ 5,000 (0.20 @ 25.4)	To 7 psi (0.4 bar) (N/A if split)
		• MILL-RIGHT BLACK • MILL-RIGHT ES	-40°F (-40°C) to 300°F (150°C)					
		• MILL-RIGHT V	-22°F (-30°C) to 400°F (204°C)					
Model 53 	• General purpose assembled seal • Heavy-duty metal outer case • Single and dual lip configurations available	• MILL-RIGHT N	-40°F (-40°C) to 200°F (93°C)	3.000 to 60.000 (76.2 to 1524.0)	3,000 f/m (15.2 m/s)	Stainless steel finger	0.015 @ 1,000 (0.38 @ 5.1) 0.010 @ 2,000 (0.25 @ 10.2) 0.005 @ 3,000 (0.13 @ 15.2)	To 7 psi (0.4 bar)
		• MILL-RIGHT BLACK • MILL-RIGHT ES	-40°F (-40°C) to 300°F (150°C)					
		• MILL-RIGHT V	-22°F (-30°C) to 400°F (204°C)					
Model 53G1 	• General purpose dual lip seal • GYLON excluder lip for non-lubricated external conditions or corrosive external conditions	• MILL-RIGHT N	-40°F (-40°C) to 200°F (93°C)	3.000 to 40.000 (76.2 to 1016.0)	1,500 f/m (7.6 m/s)	Stainless steel finger	0.010 @ 1,500 (0.25 @ 7.6)	To 7 psi (0.4 bar)
		• MILL-RIGHT BLACK • MILL-RIGHT ES	-40°F (-40°C) to 300°F (150°C)					
		• MILL-RIGHT V	-22°F (-30°C) to 400°F (204°C)					
Model 53R1 	• General purpose dual lip seal • Dual lips oppose for exclusion and retention • Spring in one element only	• MILL-RIGHT N	-40°F (-40°C) to 200°F (93°C)	3.000 to 15.000 (76.2 to 381.0)	2,000 f/m (10.2 m/s)	Stainless steel finger	0.015 @ 1,000 (0.38 @ 5.1) 0.010 @ 2,000 (0.25 @ 10.2)	To 7 psi (0.4 bar)
		• MILL-RIGHT BLACK • MILL-RIGHT ES	-40°F (-40°C) to 300°F (150°C)					
		• MILL-RIGHT V	-22°F (-30°C) to 400°F (204°C)					
Model 53R2 	• General purpose dual lip seal • Dual lips oppose for exclusion and retention • Spring in both elements	• MILL-RIGHT N	-40°F (-40°C) to 200°F (93°C)	3.000 to 15.000 (76.2 to 381.0)	1,000 f/m (5.1 m/s)	Stainless steel finger	0.010 @ 500 (0.25 @ 2.5) 0.005 @ 1,000 (0.13 @ 5.1)	To 7 psi (0.4 bar)
		• MILL-RIGHT BLACK • MILL-RIGHT ES	-40°F (-40°C) to 300°F (150°C)					
		• MILL-RIGHT V	-22°F (-30°C) to 400°F (204°C)					
Model 53T2 	• General purpose dual lip seal • Lips set in tandem configuration • Spring in both elements	• MILL-RIGHT N	-40°F (-40°C) to 200°F (93°C)	3.000 to 15.000 (76.2 to 381.0)	1,000 f/m (5.1 m/s)	Stainless steel finger	0.010 @ 500 (0.25 @ 2.5) 0.005 @ 1,000 (0.13 @ 5.1)	To 7 psi (0.4 bar)
		• MILL-RIGHT BLACK • MILL-RIGHT ES	-40°F (-40°C) to 300°F (150°C)					
		• MILL-RIGHT V	-22°F (-30°C) to 400°F (204°C)					
Model 53F1 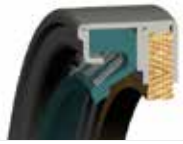	• General purpose dual lip seal • Heavy-duty metal outer case • Felt excluder	• MILL-RIGHT N	-40°F (-40°C) to 200°F (93°C)	3.000 to 15.000 (76.2 to 381.0)	1,000 f/m (5.1 m/s)	Stainless steel finger	0.010 @ 1,000 (0.25 @ 5.1)	To 7 psi (0.4 bar)
		• MILL-RIGHT BLACK • MILL-RIGHT ES	-40°F (-40°C) to 300°F (150°C)					
		• MILL-RIGHT V	-22°F (-30°C) to 400°F (204°C)					
Model 59 	• Severe service assembled seal • Heavy duty outer case • Reverse bevel lip design prevents lip rollover • Aggressive shaft-to-bore misalignment capability	• MILL-RIGHT N	-40°F (-40°C) to 200°F (93°C)	6.000 to 70.000 (152.4 to 1778.0)	5,000 f/m (25.4 m/s)	Molded-in stainless steel finger	0.093 @ 2,500 (2.36 @ 12.7) 0.047 @ 5,000 (1.19 @ 25.4)	To 7 psi (0.4 bar)
		• MILL-RIGHT BLACK • MILL-RIGHT ES	-40°F (-40°C) to 300°F (150°C)					
		• MILL-RIGHT V	-22°F (-30°C) to 400°F (204°C)					

Most designs available without spring.
Most designs available in silicone and other materials.

Solid	Features	Materials	Temp	Shaft Diameter in. (mm)	Surface Speed	Spring Type	Misalign. in. @ f/m (mm@m/s)	Pressure
Model 59G1 	• Severe service dual lip assembled seal • GYLON excluder lip for non-lubricated external conditions or corrosive external conditions	• MILL-RIGHT N	-40°F (-40°C) to 200°F (93°C)	6.000 to 40.000 (152.4 to 1016.0)	2,500 f/m (12.7 m/s)	Molded-in stainless steel finger	0.010 @ 2,500 (0.25 @ 12.7)	To 7 psi (0.4 bar)
		• MILL-RIGHT BLACK • MILL-RIGHT ES	-40°F (-40°C) to 300°F (150°C)					
		• MILL-RIGHT V	-22°F (-30°C) to 400°F (204°C)					
Model 64® 	• Severe service assembled seal • Heavy duty metal outer case • Unique carrier/garter spring combination • Industry's highest shaft-to bore misalignment capability	• MILL-RIGHT N	-40°F (-40°C) to 200°F (93°C)	8.000 to 74.409 (203.2 to 1890.0)	7,000 f/m (35.6 m/s)	Combination of stainless steel garter & stainless steel finger	0.125 @ 5,000 (3.18 @ 25.4) 0.093 @ 7,000 (2.36 @ 35.6)	To 7 psi (0.4 bar)
		• MILL-RIGHT BLACK • MILL-RIGHT ES	-40°F (-40°C) to 300°F (150°C)					
		• MILL-RIGHT V	-22°F (-30°C) to 400°F (204°C)					
Model 64G1 	• Severe service dual lip assembled seal • GYLON excluder lip for non-lubricated external conditions or corrosive external conditions	• MILL-RIGHT N	-40°F (-40°C) to 200°F (93°C)	8.000 to 55.000 (203.20 to 1397.0)	3,500 f/m (17.9 m/s)	Combination of stainless steel garter & stainless steel finger	0.010 @ 3,500 (0.25 @17.9)	To 7 psi (0.4 bar)
		• MILL-RIGHT BLACK • MILL-RIGHT ES	-40°F (-40°C) to 300°F (150°C)					
		• MILL-RIGHT V	-22°F (-30°C) to 400°F (204°C)					
Model 87 	• Severe service seal • Metal reinforced rubber O.D. • Reverse bevel lip design prevents lip rollover • Aggressive shaft-to-bore misalignment capability	• MILL-RIGHT N	-40°F (-40°C) to 200°F (93°C)	6.000 to 48.000 (152.4 to 1219.2)	5,000 f/m (25.4 m/s)	Molded-in carbon steel garter	0.100 @ 2,500 (2.54 @ 12.7) 0.050 @ 5,000 (1.27 @ 25.4)	To 7 psi (0.4 bar)
		• MILL-RIGHT BLACK • MILL-RIGHT ES	-40°F (-40°C) to 300°F (150°C)					
		• MILL-RIGHT V	-22°F (-30°C) to 400°F (204°C)					
Model 88 	• Severe service seal • Aggressive shaft-to-bore misalignment capability • Metal reinforced rubber OD for positive bore retention	• MILL-RIGHT N	-40°F (-40°C) to 200°F (93°C)	6.000 to 48.000 (152.4 to 1219.2)	5,000 f/m (25.4 m/s	Molded-in carbon steel garter	0.050 @ 2,500 (1.27 @ 12.7) 0.025 @ 5000 (0.64 @ 25.4)	To 7 psi (0.4 bar)
		• MILL-RIGHT ES	-40°F (-40°C) to 300°F (150°C)					
		• MILL-RIGHT V	-22°F (-30°C) to 400°F (204°C)					

Split Seals	Features	Materials	Temp	Shaft Diameter in. (mm)	Surface Speed	Spring Type	Misalign. in. @ f/m (mm@m/s)	Pressure
Model 21 	• General purpose split seal • Low-speed service • Cover plate required	• MILL-RIGHT N	-40°F (-40°C) to 200°F (93°C)	3.000 to 42.000 (76.2 to 1066.8)	1,000 f/m (5.1 m/s)	Molded-in stainless steel finger	0.010 @ 500 (0.25 @ 2.5) 0.005 @ 1,000 (0.13 @ 5.1)	N/A
		• MILL-RIGHT Black • MILL-RIGHT ES	-40°F (-40°C) to 300°F (150°C)					
		• MILL-RIGHT V	-22°F (-30°C) to 400°F (204°C)					
Model 23 	• General service split seal • Cover plate required • Over 300,000 sizes readily available	• MILL-RIGHT N	-40°F (-40°C) to 200°F (93°C)	3.000 (76.2) and up	2,000 f/m (10.2 m/s)	Molded-in stainless steel finger	0.010 @ 1,000 (0.25 @ 5.1) 0.005 @ 2,000 (0.13 @ 10.2)	N/A
		• MILL-RIGHT Black • MILL-RIGHT ES	-40°F (-40°C) to 300°F (150°C)					
		• MILL-RIGHT V	-22°F (-30°C) to 400°F (204°C)					
Model 24 	• Special purpose split seal for tapered housing grooves • Low-speed service • Tapered O.D. • Cover plate required	• MILL-RIGHT N	-40°F (-40°C) to 200°F (93°C)	3.000 to 21.500 (76.2 to 546.1)	1,000 f/m (5.1 m/s)	Molded-in stainless steel finger	0.010 @ 500 (0.25 @ 2.5) 0.005 @ 1,000 (0.13 @ 5.1)	N/A
		• MILL-RIGHT ES	-40°F (-40°C) to 300°F (150°C)					
		• MILL-RIGHT V	-22°F (-30°C) to 400°F (204°C)					

Split Seals	Features	Materials	Temp	Shaft Diameter in. (mm)	Surface Speed	Spring Type	Misalign. in. @ f/m (mm@m/s)	Pressure
Model 25 	• PTFE split seal • Low-speed service • Excellent chemical resistance • Cover plate required	• PTFE	-120°F (-85°C) to 400°F (204°C)	3.000 to 20.000 (76.2 to 508.0)	1,000 f/m (5.1 m/s)	Carbon steel garter	0.010 @ 500 (0.25 @ 2.5) 0.005 @ 1,000 (0.13 @ 5.1)	N/A
Model 26 	• High-performance seal • Solid or split design • Reverse bevel lip design prevents lip rollover • Reinforced rubber O.D. • Single and dual lip configurations available • Cover plate recommended for bore diameters over 10"	• MILL-RIGHT N	-40°F (-40°C) to 200°F (93°C)	0.750 to 60.000 (19.0 to 1524.0)	5,000 f/m (25.4 m/s)	Molded-in stainless steel finger	0.015 @ 1,000 (0.38 @ 5.1) 0.010 @ 2,000 (0.25 @ 10.2) 0.008 @ 5,000 (0.20 @ 25.4)	To 7 psi (0.4 bar) (N/A if split)
		• MILL-RIGHT Black • MILL-RIGHT ES	-40°F (-40°C) to 300°F (150°C)					
		• MILL-RIGHT V	-22°F (-30°C) to 400°F (204°C)					
Model 26R1 	• High-performance dual lip seal • Reverse bevel lip design prevents lip rollover • Dust lip prevents ingress of light contaminants • Cover plate recommended for bore diameters over 10"	• MILL-RIGHT N	-40°F (-40°C) to 200°F (93°C)	0.750 to 60.000 (19.05 to 1524.0)	5,000 f/m (25.4 m/s)	Molded-in stainless steel finger	0.015 @ 1,000 (0.38 @ 5.1) 0.010 @ 2,000 (0.25 @ 10.2) 0.008 @ 5,000 (0.20 @ 25.4)	To 7 psi (0.4 bar) (N/A if split)
		• MILL-RIGHT Black • MILL-RIGHT ES	-40°F (-40°C) to 300°F (150°C)					
		• MILL-RIGHT V	-22°F (-30°C) to 400°F (204°C)					

Excluder Seals	Features	Materials	Temp	Shaft Diameter in. (mm)	Surface Speed	Spring Type	Misalign. in. @ f/m (mm@m/s)	Pressure
Model 143A1 	• Face-type excluder seal† • Split design • High-speed service • Stainless steel clamp • Designed for 2.000 ±0.500" (50.8 ±12.7 mm) assembled width	• Nitrile	-40°F (-40°C) to 200°F (93°C)	17.000 to 80.000 (431.8 to 2032.0)	5,000 f/m (25.4 m/s)	N/A	N/A	N/A
		• Hydrogenated Nitrile	-40°F (-40°C) to 300°F (150°C)					
		• Fluoroelastomer	-22°F (-30°C) to 400°F (204°C)					
Model 143A2 	• Face-type excluder seal† • Split design • High-speed service • Designed for 0.781 ±0.156" (19.8 ±3.9 mm) assembled width	• Nitrile	-40°F (-40°C) to 200°F (93°C)	6.000 to 80.000 (152.4 to 2032.0)	5,000 f/m (25.4 m/s)	N/A	N/A	N/A
		• Hydrogenated Nitrile	-40°F (-40°C) to 300°F (150°C)					
		• Fluoroelastomer	-22°F (-30°C) to 400°F (204°C)					
Model 144W1 	• Contoured lip face-type excluder seal† • Split design • Excels in environments with heavy contamination and wash down • Designed for 1.500 (38.1mm) assembled width	• MILL-RIGHT N	-40°F (-40°C) to 200°F (93°C)	17.000 to 75.500 (431.8 to 1917.7)	2,500 f/m (12.7 m/s)	N/A	N/A	N/A
		• MILL-RIGHT Black						
Model 144W2 	• Contoured lip face-type excluder seal† • Split design • Excels in environments with heavy contamination and wash down • Designed for 1.250 (31.8mm assembled width	• MILL-RIGHT N	-40°F (-40°C) to 200°F (93°C)	17.000 to 80.000 (431.8 to 2032.0)	2,500 f/m (12.7 m/s)	N/A	N/A	N/A
		• MILL-RIGHT Black						

Excluder Seals	Features	Materials	Temp	Shaft Diameter in. (mm)	Surface Speed	Spring Type	Misalign. in. @ f/m (mm@m/s)	Pressure
Model 145A1 	• Face-type excluder seal • Solid design • High-speed service • Designed for 2.000 ±0.500" (50.8 ±12.7 mm) assembled width	• Nitrile	-40°F (-40°C) to 200°F (93°C)	17.000 to 80.000 (431.8 to 2032.0)	5,000 f/m (25.4 m/s)	Stainless steel garter	N/A	N/A
		• Hydrogenated Nitrile	-40°F (-40°C) to 300°F (150°C)					
		• Fluoroelastomer	-22°F (-30°C) to 400°F (204°C)					
Model 145A2 	• Face-type excluder seal • Solid design • High-speed service • Designed for 0.781 ±0.156" (19.8 ±3.9 mm) assembled width	• Nitrile	-40°F (-40°C) to 200°F (93°C)	7.000 to 80.000 (177.8 to 2032.0)	5,000 f/m (25.4 m/s)	Stainless steel garter	N/A	N/A
		• Hydrogenated Nitrile	-40°F (-40°C) to 300°F (150°C)					
		• Fluoroelastomer	-22°F (-30°C) to 400°F (204°C)					
External Seals	**Features**	**Materials**	**Temp**	**Shaft Diameter in. (mm)**	**Surface Speed**	**Spring Type**	**Misalign. in. @ f/m (mm@m/s)**	**Pressure**
Model 26E 	• General purpose external seal • Solid design • Reverse bevel lip design prevents lip rollover • Reinforced rubber ID	• MILL-RIGHT N	-40°F (-40°C) to 200°F (93°C)	1.000 to 60.000 (25.4 to 1524.0)	5,000 f/m (25.4 m/s)	Stainless steel finger	0.015 @ 1,000 (0.38 @ 5.1) 0.010 @ 2,000 (0.25 @ 10.2) 0.008 @ 5,000 (0.20 @ 25.4)	To 7 psi (0.4 bar)
		• MILL-RIGHT Black • MILL-RIGHT ES	-40°F (-40°C) to 300°F (150°C)					
		• MILL-RIGHT V	-22°F (-30°C) to 400°F (204°C)					
Specialty Seals	**Features**	**Materials**	**Temp**	**Shaft Diameter in. (mm)**	**Surface Speed**	**Spring Type**	**Misalign. in. @ f/m (mm@m/s)**	**Pressure**
PS-SEAL Single Lip 	• Assembled seal for high pressure applications • GYLON element offers excellent chemical resistance • Dry running up to 800 fpm (3.5 m/s)	• GYLON	-40°F (-40°C) to 400°F (204°C)	0.438 to 20.000 (11.1 to 508.0) max seal O.D.	2,000 f/m (10.2 m/s)	N/A	0.005 @ 2000 (0.13 @ 10.2)	To 150 psi (10 bar)
		• FDA GYLON						
PS-SEAL Single Lip Reverse 	• Assembled seal for high pressure applications • GYLON element offers excellent chemical resistance • Dry running up to 800 fpm (3.5 m/s)	• GYLON	-40°F (-40°C) to 400°F (204°C)	0.438 to 20.000 (11.1 to 508.0) max seal O.D.	2,000 f/m (10.2 m/s)	N/A	0.005 @ 2000 (0.13 @ 10.2)	To 150 psi (10 bar)
		• FDA GYLON						
PS-SEAL Dual Opposed 	• Assembled seal for high pressure applications • GYLON element offers excellent chemical resistance • Dry running up to 800 fpm (3.5 m/s)	• GYLON	-40°F (-40°C) to 400°F (204°C)	0.438 to 20.000 (11.1 to 508.0) max seal O.D.	2,000 f/m (10.2 m/s)	N/A	0.005 @ 2000 (0.13 @ 10.2)	To 150 psi (10 bar)
		• FDA GYLON						
PS-SEAL Dual Tandem 	• Assembled seal for high pressure applications • GYLON element offers excellent chemical resistance • Dry running up to 800 fpm (3.5 m/s)	• GYLON	-40°F (-40°C) to 400°F (204°C)	0.438 to 20.000 (11.1 to 508.0) max seal O.D.	2,000 f/m (10.2 m/s)	N/A	0.005 @ 2000 (0.13 @ 10.2)	To 150 psi (10 bar)
		• FDA GYLON						

Specialty Seals	Features	Materials	Temp	Shaft Diameter in. (mm)	Surface Speed	Spring Type	Misalign. in. @ f/m (mm@m/s)	Pressure
Model 26HR 	• Special purpose seal for high misalignment applications • Low-speed service • Increased misalignment capability over standard 26	• MILL-RIGHT N	-40°F (-40°C) to 200°F (93°C)	1.000 to 20.000 (25.4 to 508.0)	1,000 f/m (5.1 m/s)	Molded-in carbon steel garter	Application dependent	To 7 psi (0.4 bar)
		• MILL-RIGHT Black • MILL-RIGHT ES	-40°F (-40°C) to 300°F (150°C)					
		• MILL-RIGHT V	-22°F (-30°C) to 400°F (204°C)					
Model 50 	• Low-speed service • Moderate pressure	• MILL-RIGHT N	-40°F (-40°C) to 200°F (93°C)	5.000 to 12.000 (127.0 to 304.8)	1,000 f/m (5.1 m/s)	Molded-in carbon steel garter spring	0.010 @ 1,000 (0.25 @12.7)	To 35 psi (2.4 bar)
Model 54 	• Special purpose assembled seal • Excluder seal • Designed for spherical bearing surfaces - seal does not contact shaft • See Appendix E	• MILL-RIGHT N	-40°F (-40°C) to 200°F (93°C)	For spherical radii from 2.375 to 13.438 (60.3 to 341.3)	1,000 f/m (5.1 m/s)	Stainless steel finger	N/A	To 50 psi (3.4 bar)
Model 57 	• Metal reinforced rubber O.D. • Reverse bevel lip design prevents lip rollover • Available in single & dual lip • Ideal for slow-speed service applications (i.e. continuous casters)	• MILL-RIGHT N	-40°F (-40°C) to 200°F (93°C)	2.000 to 12.000 (50.8 to 304.8)	500 f/m (2.5 m/s)	Molded-in stainless steel finger	0.015 @ 500 (0.38 @ 2.5)	To 7 psi (0.4 bar)
		• MILL-RIGHT Black • MILL-RIGHT ES	-40°F (-40°C) to 300°F (150°C)					
		• MILL-RIGHT V	-22°F (-30°C) to 400°F (204°C)					
Model 58 	• High-temp, assembled seal • THERMO-CERAM™ sealing element • Ideal for abrasive environments • Grease lubricated apps only	• THERMO-CERAM	To 1600°F (871°C)	2.000 to 12.000 (50.8 to 304.8)	500 f/m (2.5 m/s)	N/A	0.015 @ 500 (0.38 @ 2.5)	Ambient
Model 62 	• Assembled seal • Solid design • Low-speed service • Excellent chemical resistance	• PTFE	-120°F (-85°C) to 400°F (204°C)	0.437 to 20.000 (11.1 to 508.0) in max seal O.D.	2,000 f/m (10.2 m/s)	Carbon steel garter	0.005 @ 2,000 (0.13 @ 10.2)	To 7 psi (0.4 bar)

† Not recommended for rotating application (Seal should not rotate)

KLOZURE® Bearing Isolators

When superior bearing protection is what you need for your pumps, motors, gear boxes and other rotating equipment, rely on the KLOZURE family of bearing isolators. With their patented Cam-Lock design and engineered unitizing ring, GUARDIAN®, SGi®, FLOOD-GARD®, PUR-GARD®, and MICRO-TEC® II provide superior protection in a broad range of environments. When a non-metallic isolator is what you need, look to ISO-GARD®.

METALLIC BEARING ISOLATORS

GUARDIAN



GUARDIAN offers exceptional bearing protection for pumps and motors under the harshest conditions. A truly non-contacting seal that utilizes an engineered unitizing ring providing a virtually frictionless seal. Garlock's patented o-ring Cam-Lock system allows for ease of installation without the need of an arbor press and provides greater holding power. **Figure 1** shows the components of a GUARDIAN Bearing Isolator.

SGI



SGi is a marriage of the Garlock GUARDIAN non-sparking, non-contact labyrinth seal and the AEGIS® shaft grounding ring. SGi is a maintenance-free and reliable bearing protection by preventing bearing contamination, lubrication loss and electrical damage. It was developed to easily replace radial lip seals and traditional labyrinth seals, all within a compact design.

Split Bearing Isolator (180°)



The first truly unitized split isolator, the Split GUARDIAN offers exceptional bearing protection for pumps and motors under the harshest condition. When uptime and mean time to repair (MTTR) are your primary concerns, the Split Isolator is your only real choice. Rigging and maintenance is very costly, the Split GUARDIAN can save thousands of dollars in maintenance due to the unique split design. No more costly tear down of equipment required, with the Split GUARDIAN, the average installation takes minutes instead of hours. Split designs are also available for the SGi and MICRO-TEC II.

MICRO-TEC II



MICRO-TEC II offers the same exceptional bearing protection as GUARDIAN plus the added protection from high concentration of airborne contaminants. The seal is equipped with a special microcellular filter that blocks out even the tiniest of particles to ensure your critical equipment continues running.

PUR-GARD

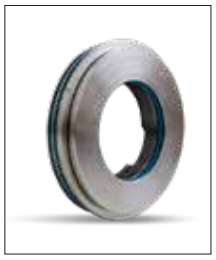

PUR-GARD bearing isolators offer the ultimate rotating equipment sealing solutions for the food processing industry. Manufactured with materials that are FDA compliant, metal detectable and x-ray inspectable, PUR-GARD is configured with a patented IP66 labyrinth design based on the proven GUARDIAN bearing isolator. PUR-GARD is a revolutionary seal that combines improved safety and overall process purity with cost savings through extended equipment and bearing life.

FLOOD-GARD



FLOOD-GARD bearing isolators offer the ultimate in bearing protection, unlocking the benefits of bearing isolator labyrinth technology for equipment operating with flooded oil lubrication levels. With its patent pending IP66 tested labyrinth design, FLOOD-GARD is a revolutionary seal that combines improved safety and overall process efficiency, with cost savings through extended equipment and bearing life.

Split Pillow Block



Garlock Split Pillow Block bearing isolators are available in all standard styles (GUARDIAN, Split GUARDIAN, MICRO-TEC II, ISO-GARD), as well as custom variations of other product styles, including FLOOD-GARD, for oil lubricated bearings requiring a positive seal to prevent oil leaking and loss. Contact Garlock KLOZURE Engineering for additional details.

Custom Bearing Isolators



Custom design options for Garlock bearing isolators are available to accommodate unique application requirements, such as: increased misalignment capabilities, improved protection for harsh operating environments, and specific installation requirements including bolt flange mounted configurations. Contact Garlock KLOZURE Engineering for additional details.

KLOZURE® Bearing Isolators

COMPOSITE BEARING ISOLATORS

ISO-GARD



Constructed using filled PTFE, ISO-GARD bearing isolators provides excellent chemical resistance within a wide temperature range, suitable for many applications. Since the seal can be used in so many applications, you no longer need to stock multiple versions of pumps and motors with different sealing systems; saving you both stock space and money. Its press fit design allows for ease of installation with no tools required, thereby reducing production downtime and saving maintenance costs. Like all Garlock Isolators, ISO-GARD comes in a variety of configurations with both flanged and non flanged designs available. **Figure 2 on page 25** shows the components of an ISO-GARD®.

TYPICAL GUARDIAN

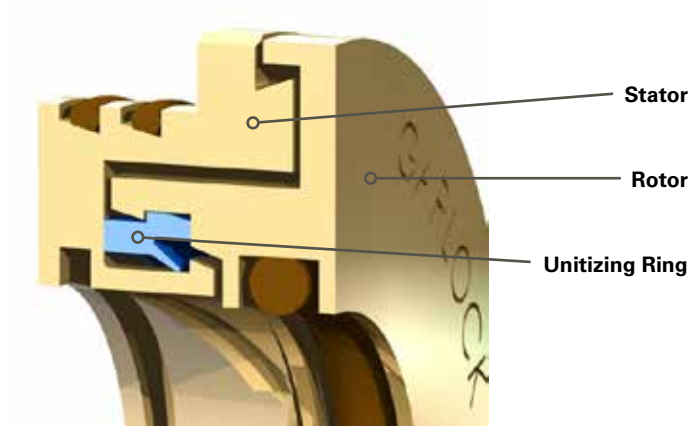

Figure 1 - GUARDIAN Components

TYPICAL ISO-GARD



Figure 2 - ISO-GARD Components

GENERAL SPECIFICATIONS

The following general guidelines will help to provide the most robust, efficient and effective sealing system. While generally applicable, they cannot be interpreted to apply to each and every application. For specific application assistance please contact KLOZURE Engineering.

BEARING ISOLATOR FUNCTION

Bearing isolators are engineered non-contact labyrinth seals. They are designed to extend bearing life by retaining lubricant and excluding contamination when used in general service or critical applications. Bearing isolators last longer than traditional oil seals because they are non-contact seals, meaning they do not rely on wearing components to seal. Common features of Garlock KLOZURE bearing isolators are illustrated in Figures 1 and 2.

Cam-Lock o-ring grooves allow Garlock KLOZURE bearing isolators to be installed by hand, simplifying the installation process.

Each Garlock KLOZURE bearing isolator has a stationary component (stator) fixed to the bearing housing (bore) and rotating component (rotor) fixed to the shaft. The rotor and stator are connected by a unitizing ring for metallic bearing isolators or self-unitized for ISO-GARD. The unitizing ring, shown in Figure 1, connects the GUARDIAN rotor and stator and ensures that there is no metal to metal contact between the two components. With ISO-GARD, Figure 2, the rotor is locked into the stator so they will not separate.

The clearance between the rotor and stator forms the labyrinth path. This torturous path is engineered to exclude contamination from the bearing housing. Any contamination that enters the bearing isolator labyrinth is expelled through the expulsion port at the 6 o'clock position of the bearing isolator.

The expulsion port is illustrated at the bottom of Figure 3a. On the inboard side of the bearing isolator there is a lubrication collection channel and drain port to collect and return splashed bearing lubricant back into the bearing housing sump.

FLOODED VS. NON-FLOODED CONDITIONS

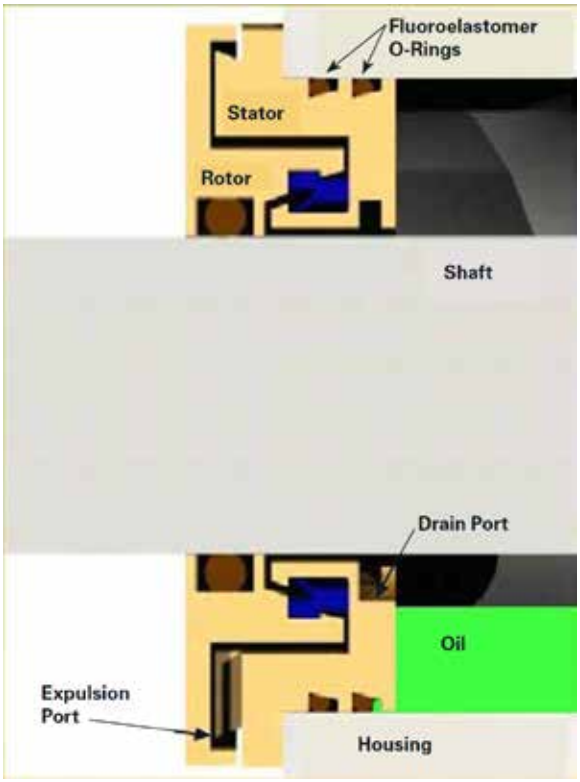

Figure 3a | Traditional bearing isolator under normal operating conditions

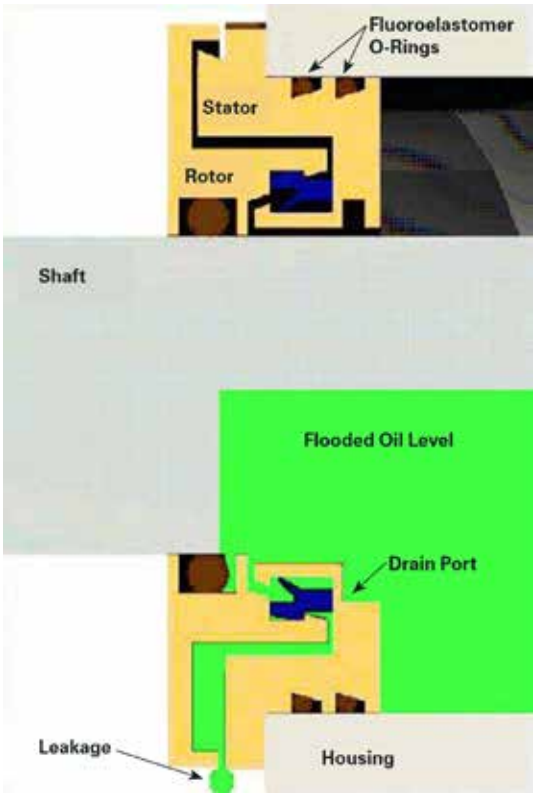

Figure 3b | Traditional bearing isolator under flooded conditions

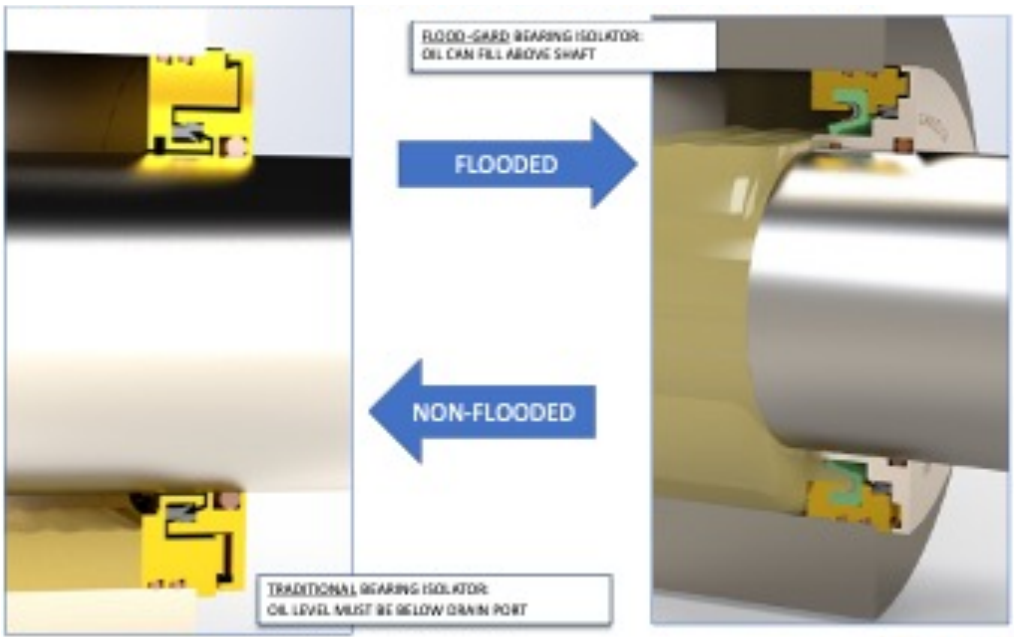

Traditional bearing isolators are designed to operate in non-flooded oil bath, grease packed, and dry operating conditions. An acceptable non-flooded condition exists when oil in a bearing housing is maintained below the drain port in both static and operational conditions, Figure 3a. If oil rises above the drain port of the bearing isolator, as a result of oil splash accumulating behind the seal during operation, or from a flooded static fill level, leakage will occur, Figure 3b. In flooded oil, oil mist, or in operating conditions with changing lubrication levels behind the seal (from non-flooded to flooded), a FLOOD-GARD flooded bearing isolator should be used. See FLOOD-GARD on page 26 for flooded information on flooded conditions.

NATIONALLY RECOGNIZED STANDARDS

Many bearing isolator models conform to nationally accepted standards for operation including API, IEEE, and NEMA. A brief summary of these standards follows. Please see bearing isolator product information section for product-specific conformances.

API 610

API 610 is a standard for centrifugal pumps used in petroleum, heavy duty chemical and gas industry services. API standards are published by the American Petroleum Institute. Paragraph 5.10.2.7 of the API 610 standard indicates that bearing housings for rolling-element bearings should be designed to retain oil and prevent contamination. Acceptable sealing devices include replaceable labyrinth-type or magnetic-type end seals and deflectors. Lip-type seals are not acceptable. All seals and deflectors are to be made of non-sparking materials.

IEEE 841

IEEE (Institute of Electrical and Electronics Engineers) defines requirements for enclosures for the petroleum and chemical industries. Enclosures are defined as either Totally Enclosed Fan-Cooled (TEFC) or Totally Enclosed Non-Ventilated (TENV). Definitions are specified by IP ratings as per NEMA MG 1, part 5.

NEMA MG 1

NEMA (National Electrical Manufacturers Association) designates a degree of protection provided by enclosures for rotating electrical machines. It also designates the test procedures to determine if a machine meets the requirements. The IP rating designates two characteristic numeric identifiers of an enclosure's ability to protect against solid foreign objects and water ingress. The IP rating consists of the letters "IP" followed by two digits, the first applicable to protection against solid object ingress and the second to protection against water ingress.

All standard KLOZURE bearing isolators are specified for a rating of IP55 or IP56. The following defines the characteristic numerals for these ratings:

A first characteristic numeral of 5 indicates a dust protected machine. To verify conformance to this level a bearing isolator is installed in an enclosed environment. Talcum powder (sifted through a sieve with spacing of 75 µm) is agitated with a rotating fan. Vacuum is pulled through the seal for a minimum of 2 hours.

A second characteristic numeral of 5 indicates a machine protected against water jets. Conformance is verified by installing the bearing isolator in an enclosed environment and subjecting to spraying water from all practical directions at 11.9 – 13.2 liters/min (3.1 – 3.5 gpm) for 3 minutes at a minimum nozzle discharge pressure of 0.3 bar (4.4 psi).

A second characteristic numeral of 6 indicates a machine protected against heavy seas or powerful jets. Conformance is verified by installing the bearing isolator in an enclosed environment and subjecting to spraying water from all practical directions at 100 liters/min (26.4 gpm) ± 5% for 3 minutes at a minimum nozzle discharge pressure of 1 bar (14.5 psi).

SGI PROTECTS VFD DRIVEN MOTORS

Have your bearings been damaged by electrical discharge?

When electric induction motors are driven by variable frequency drives (VFD), damaging electrical voltages are induced onto the motor shaft and will discharge through the motor's bearings causing premature bearing failure. Shaft voltages are present the moment the drive is turned on. Damage to bearings and lubrication can occur long before there is a catastrophic failure. By the time you hear the audible noise caused by the fluting damage in the bearing, it is already too late! It is important to protect the motor's bearings from ingress and electrical damage right from the start to avoid failures, costly down time, or complete replacement.

How can you tell if the bearings are damaged?

Damaging voltages can be detected early with shaft voltage measurements for any motor operated by a VFD. Vibration analysis is another method to detect and monitor electrical bearing damage. A good indicator of a fluted bearing close to catastrophic failure is to simply listen to the system. Bearing deterioration can be heard as a loud audible noise!

LUBRICATION DETERIORATION



Bearing protection is not just about ensuring the lubrication stays clean and retained, but also ensuring the quality of the lubricant is maintained. Continuous electrical arcing in the motor bearings will often rapidly deteriorate the quality of the lubrication and cause bearing race damage. When an arc occurs, the lubrication is super heated and causes lubrication break-down. The grease will often have a burnt/black appearance instead of the normal "clean" color. Deterioration of the grease will also result in a greatly shortened bearing life.

EDM PITTING AND MICRO CRATERS IN ROLLING ELEMENTS

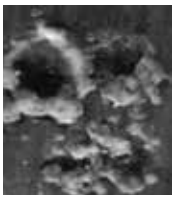

Electrical Discharge Machining (EDM) is an electrical arc that is created when the shaft voltage overcomes the dielectric of the oil film between the rolling element and the bearing race. The electrical current arcs through the oil and grease and melts the steel race wall, creating a pit in the surface between 5 to 10 micron's in diameter. These pits are visible to the eye in the form of a light colored track on the bearing race. Over time, the micro craters can result in fluted bearing races.

BEARING FLUTING



Bearing fluting is an accelerated "washboard" wear pattern in the bearing race as a result of continued EDM pitting. As the rolling element travels over already damaged areas, more damage occurs. High system vibration and noise are often the result of bearing fluting which will result in costly system failure.

SHAFT FINISH

Bearing isolators are designed with a static o-ring fit on the shaft. The static o-ring will not wear or damage the shaft surface. Even though the performance of a bearing isolator is not tied as critically to the shaft surface finish as an oil seal, a minimum surface roughness of 64µin (1.63 µm) is required to provide adequate static sealing at the o-ring to shaft interface. Bearing isolators do not require a minimum shaft hardness as there is no relative movement between the shaft and bearing isolator rotor.

Seal Type	Required Shaft Hardness	Required Shaft Finish	
	Rockwell C	µin (microinches) Ra	µm (micrometers) Ra
Bearing Isolators	Not Specified	64 maximum	1.63 maximum

Table 1 — Shaft Requirements

SHAFT LEAD

Bearing isolators are designed with an o-ring fit on the shaft. The stationary o-ring will seal minor amounts of shaft lead. Assuming the surface finish of the shaft is within the recommended range 64 µin (1.63 µm), shaft lead is acceptable.

SHAFT-TO BORE MISALIGNMENT

Shaft-to-bore misalignment is defined as the distance by which the shaft is off-center with respect to the bore. This can be simply measured as the distance between the shaft center line and the bore center line. See Figure 4.

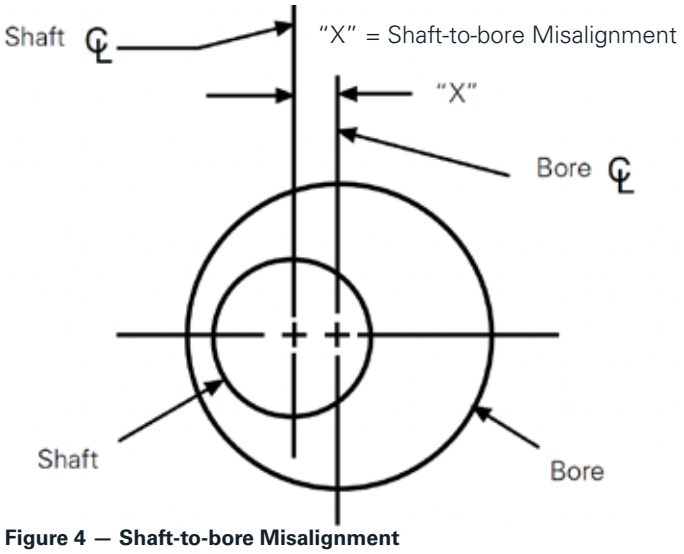

Figure 4 — Shaft-to-bore Misalignment

DYNAMIC RUNOUT

Dynamic runout is defined as the amount by which the shaft (at the sealing surface) does not rotate around the true center. It is measured by the total movement of a dial indicator held against the shaft surface while the shaft is slowly rotated. This is read as total indicator reading, or TIR. See Figure 5.

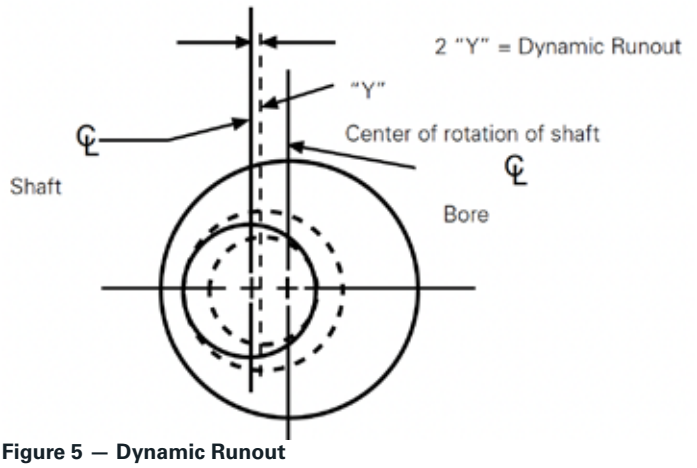

Figure 5 — Dynamic Runout

AXIAL MOTION

Axial motion is movement of the shaft into and out of the bore, referred to as reciprocating motion. Due to the static seal between the shaft to rotor and bore to stator interfaces, the amount of reciprocating movement of the shaft must be controlled to within the seal design specifications found for each design in the Engineering Specifications by Design section.

PRESSURE

With traditional metallic and composite bearing isolators, any differential pressure from one side of the seal to the other will result in leakage, either of the lubrication egressing, or contamination ingressing.

	Maximum Operating Differention Pressure*		
Seal Type	psi (lbs. per sq. in)	kPa (kilopascals)	bar
Non-Flooded Bearing Isolators (Metallic and Composite)	0	0	0

Table 2 — Maximum Pressure Limits by Seal Type

SURFACE SPEED

Safe operating speeds depend on shaft finish, misalignment and runout, type of lubricant, amount of lubricant and seal design. As shaft speed increases, these factors become more critical.

The formula for determining surface speed for a particular application is listed below. Alternately, see Appendix F for the surface speed chart.

Surface Speed (f/m) = ShaftDia(in) * RPM * 0.262
Surface Speed (f/m) = ShaftDia(mm) * RPM * 0.0103
Surface Speed (m/s) = ShaftDia(in) * RPM * 0.0013299
Surface Speed (m/s) = ShaftDia(mm) * RPM * 0.0000524

Surface speed limits vary with isolator design. Please refer to the product offerings for limits on specific Garlock KLOZURE bearing isolators.

Conversion Formulas		
Multiply	By	To Obtain
Inch (in)	25.4	millimeter (mm)
millimeter (mm)	0.0394	Inch (in)
bar	100	kilopascal (kPa)
bar	14.504	psi (lb/sq. in)
kilopascal (kPa)	0.010	bar
kilopascal (kPa)	0.145	psi (lb/sq. in)
psi (lb/sq. in)	0.0689	bar
psi (lb/sq. in)	6.895	kilopascal (kPa)

Table 3 — Conversion Formulas

Temperature Conversion Formulas
°F = 1.8 (°C) + 32
°C = (°F - 32)/1.8

Table 4 — Temperature Conversion

* IMPORTANT NOTE *

The recommendations in this catalog as to shaft finishes, misalignment, runout, speeds, temperatures, and tolerances are those generally applicable, but they are not to be interpreted as applying, without reservation or exception, to each and every application. The model and type of seal selected for a given application, and other conditions surrounding that application, may modify these average limitations one way or the other. Therefore, it is desirable in most cases to provide full information to KLOZURE and have our experienced staff of engineers submit a recommendation.

SHAFT AND BORE TOLERANCES

Close tolerances in the finished dimensions of the shaft, in the bore of the housing, and in the bearing isolator itself are essential to satisfactory seal performance. Table 5 for recommended shaft and bore diameter tolerances.

Shaft Diameter		Recommended Tolerance	
inch	mm	inch	mm
thru 6.000	thru 152.50	±0.002	±0.05
6.001 & up	152.41 & up	±0.003	±0.08
Shaft Diameter		**Recommended Tolerance**	
inch	mm	inch	mm
thru 6.000	thru 152.50	±0.001	±0.03
6.001-10.000	152.41-254.00	±0.002	±0.05
10.001 & up	254.01 & up	±0.003	±0.08

Table 5 — Shaft and Bore Tolerances for Bearing Isolators

SHELF LIFE FOR GARLOCK BEARING ISOLATORS

Bearing isolators should be stored with caution. The service life of bearings and other costly machined parts may depend upon how well the sealing component is stored. Hazards which may be encountered include: temperature, ozone, humidity, radioactive materials, fumes, insects, rodents, dust, grit and mechanical damage. The storage area should be cool (60 - 90°F) and with average (40 – 70%) humidity. Seals should be stored on a first-in/first-out basis, since even under ideal conditions, an unusually long shelf life may cause deterioration of component materials.

Material	Shelf Life
FKM	10 YEARS
Silicone/VMQ	10 YEARS
Bronze	INDEFINITE
316 Stainless Steel	INDEFINITE
PTFE (filled)	INDEFINITE

EQUIPMENT PREPARATION

Prior to the installation of any isolator, all of the equipment must be thoroughly inspected. Disconnect all system power and follow all standard safety procedures throughout the installation of the isolator.

Check the shaft and bore surfaces. The shaft finish should be better than 64 µin (1.63 µm). Lead should be minimal, but a polished surface is not required. The bore surface must be equal to or less than 64 µin (1.63 µm). The shaft and bore should include an edge relief, such as a chamfer, to prevent shearing of the o-ring.

The shaft and bore must be free of any type of defect. This includes any burrs, nicks, sharp edges, indentations, scratches, etc. Clean all foreign debris from the area. In many cases, the shaft will have a wear groove from a previous lip seal. Care must be taken that the rotor o-ring does not ride in this area.

If drive features are present on the shaft, such as a keyway or spline, the drive feature must be covered during installation. This can be accomplished using an installation tool, polyethylene tape, brass shim stock with smooth edges, or a wooden plug with smooth edges.

SEAL PREPARATION

Garlock KLOZURE GUARDIAN, MICRO-TEC II, ISO-GARD, FLOOD-GARD, and SGi bearing isolators are unitized. Any attempts to disassemble the seal will cause seal damage and void warranty.

Inspect the outer diameter and inner diameter o-rings, when available. These o-rings should be free from defects. Apply a small amount of lubricant (included with the seal) to all o-rings.

SOLID BEARING ISOLATOR INSTALLATION WITH O-RING FIT (METALLIC AND COMPOSITE PTFE)

Push the seal evenly onto the shaft using hand pressure only as shown in Figure 6.

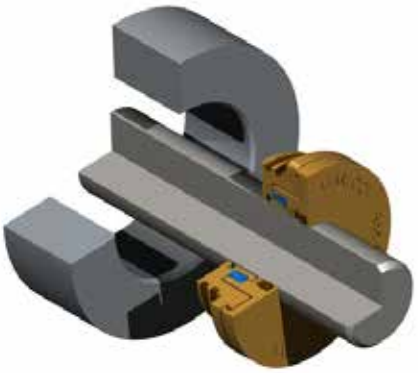

Figure 6 — Seal installation on Shaft

If the seal is equipped with a drain port, rotate it to the 6 o'clock position. GUARDIAN®, ISO-GARD®, and MICRO-TEC® II isolators are provided with an orientation slot on the outside diameter of the stator. This slot should be rotated to the 12 o'clock position to ensure appropriate orientation of the drain port. See Figure 7 for clarification.

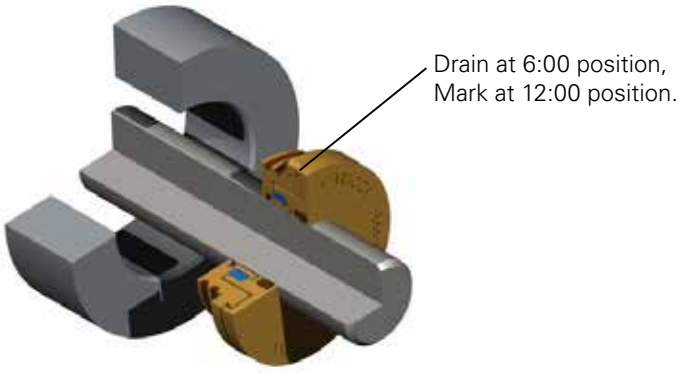

Figure 7 — Drain Port Positioning

Push the seal gently into the bore using hand pressure only. If necessary, gently tap the seal using a soft faced tool. Flanged seals are fully seated when the flange is flush against the housing. Flangeless seal can be installed at the bottom of the housing, or flush with the bore face. See Figure 8.

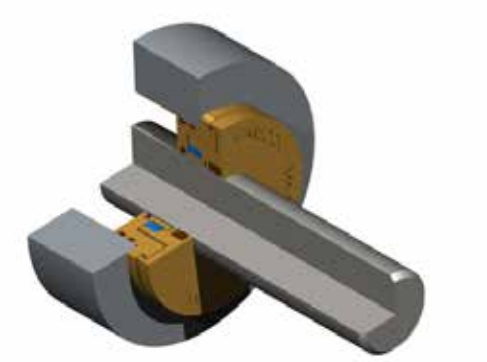

Figure 8 — Flanged Seal Flush with Housing Face

POST INSTALLATION

Inspection

Once the seal has been installed, carefully inspect the sealing area, looking for damage to the seal. Confirm that the rotor rotates by gently spinning the shaft.
Never flood the bearing isolator or block the expulsion ports. These conditions will cause seal failure.

Removal

Removal of old isolators should be performed similar to the installation, but from the back side of the seal. If access to the backside is not possible, gently pry the seal from the housing bore in small increments, working around the seal in a star pattern. Care must be taken not to damage the shaft or housing bore.

SPLIT INSTALLATION INSTRUCTIONS (O-RING & PRESS FIT)

1. Split GUARDIAN isolators are shipped assembled. Upon removing from the box, DO NOT remove the installation brackets holding the rotor (part of the seal that rotates with the shaft) and stator (part of the seal which seats into the housing bore). Simply, loosen and remove the two hex head screws in the rotor and pull the two assembled halves away from each other to separate the seat.



2. Apply a small amount of lubricant (included in the package) to all o-rings.
3. Place both halves of the seal around the shaft, taking care that the stator pins and the rotor screw holes are aligned.



4. Reassemble the two halves by tightening the screws. Make sure the two halves are held together tightly, with no gap at the split. DO NOT over tighten the screw.
5. Remove both brackets from the seal. Position the drain port at 6 o'clock position or the notch on the Stator at 12 o'clock position. (NOTE: Notch and Drain port are 180° apart)

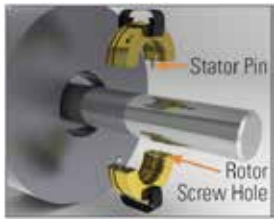

6. O-ring Fit Installation: (Split GUARDIAN & MT-180) Gently push the seal assembly in the housing, using only hand pressure. If necessary, gently tap the seal into the housing using ONLY a soft-faced tool, working around the seal in a star pattern.

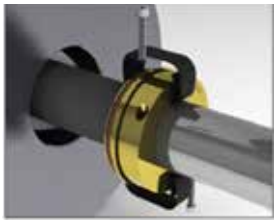



   a. Press Fit Installation: (SGi-180) Press the seal assembly in the housing, using either a press or if necessary, gently tap the seal into the housing using ONLY a soft-faced tool, working around the seal in a star pattern.
7. Check that the seal is flush to the housing. Seal is fully seated when the flange is flush against the housing. If not, carefully pry the seal away from the housing in small increments, again working around the seal in a star pattern. When the seal is fully disengaged from the housing, repeat Step 6 to make sure the seal is fully seated against the housing.

Once the seal has been installed, carefully inspect the sealing area, making sure no damage has occurred during installation. Confirm that the rotor rotates freely by gently spinning the shaft by hand. Make sure the notch on top of the Stator is at the 12 o'clock position.

SOLID AND SPLIT INSTALLATION INSTRUCTIONS (SGI ONLY)

SGi is designed to be installed into a motor frame to dissipate shaft voltage generated by the VFD. Since there are many motor sizes, voltage ratings, motor orientations, lubrication types, and lubrication levels, the appropriate sealing configuration must be used. Refer to www.garlock.com or call 1-800-448-6688 for the proper installation configuration on your specific motor setup. Apply a small amount of lubricant (included in the package) to the rotor o-ring(s).

1. Push the seal evenly onto the shaft by hand.
2. Position the drain port at 6 o'clock position or the notch on the Stator at 12 o'clock position. (Note: Notch and drain port are 180° apart)
3. Press the seal assembly in the housing, using either a press or if necessary, gently tap the seal into the housing using ONLY a soft-faced tool, working around the seal in star pattern.
4. Check that the seal is flush to the housing. Seal is fully seated when the flange is flush against the housing. If not, carefully pry the seal away from the housing in small increment, again working around the seal in star pattern. When the seal is fully disengaged from the housing, repeat Step 4 to make sure the seal is fully seated against the housing.
5. Once the seal has been installed, carefully inspect the sealing area, making sure no damage has occurred during installation. Confirm that the rotor rotates freely by gently spinning the shaft by hand. Make sure the notch on top of the stator is at the 12 o'clock position.

NEVER flood or submerge the seal. These conditions will cause the seal to fail.

Split GUARDIAN® for Split Pillow Block

INSTALLATION INSTRUCTIONS

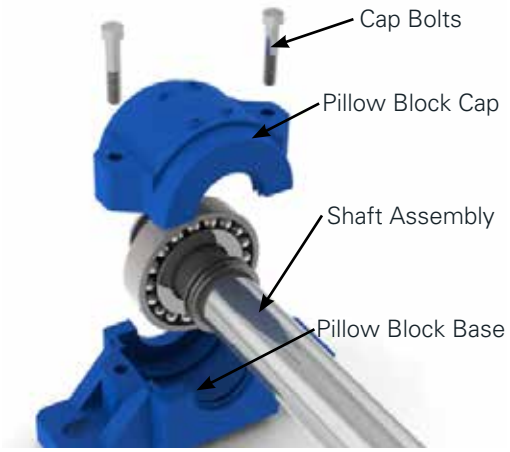

Figure 1

Prior to installation of the Split GUARDIAN bearing isolator, equipment must be thoroughly inspected. Disconnect all system power and follow all standard safety procedures throughout the installation.

Remove all connecting oil/grease circulation hose (if any) from pillow block. Loosen and remove the cap bolts and lift the pillow block cap up. Carefully, lift the entire shaft and bearing assembly up and out of the pillow block base. (See Figure 1). Use a lifting crane or other similar device if necessary.



Figure 2

1. Split GUARDIAN isolators are shipped assembled. Upon removing the isolator from box, DO NOT remove the installation brackets (Figure 2) holding the rotor (part of seal that rotates with the shaft) and stator (part of the seal which seats into the housing bore).
2. Simply loosen and remove the two socket head bolts from the rotor (Figure 3) and pull the two assembled halves away from each other to separate the seal.
3. Apply a small amount of lubricant (included) to all o-rings.
4. Place both halves of the seal around the shaft, taking care that the stator pins and the rotors screw holes are aligned. (Figure 4).
5. Reassemble the two halves of the seal around the shaft, by installing the socket head bolts. Tighten the bolts enough to secure the rotor around the shaft, but do not fully tighten until final alignment of the seal with the housing has been completed in the following steps.
6. REMOVE both brackets from the seal. Position the drain port at 6 o'clock position or the notch on the stator at 12 0'clock position. (NOTE: Notch and drain port are 180˚ apart).



Figure 3

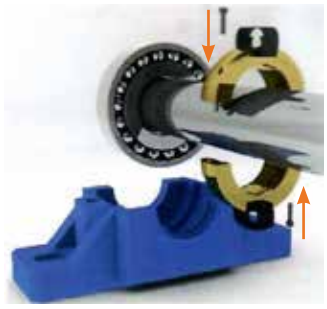

Figure 4

Split GUARDIAN® for Split Pillow Block

INSTALLATION INSTRUCTIONS

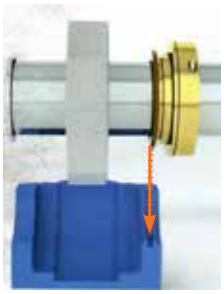

Figure 5

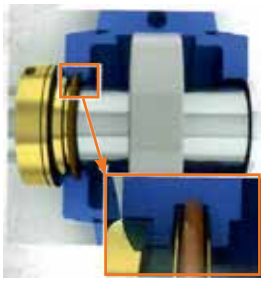

Top view and details of "tooth-like" configuration

Figure 6

7. Gradually lower the shaft and bearing assembly towards the lower housing, leaving enough space between the seal assembly and the housing to allow axial positioning of the seal. Align the outer o-ring of the seal with the center seal groove of the pillow block housing (Figure 5 & 6).

8. When the bearing and seal are aligned to the pillow block, slowly and carefully lower the entire shaft assembly onto the pillow block base (Figure 6). Adjust the bearing and the seal as necessary before fully dropping the shaft assembly in place (Figure 7). Once the seal is properly positioned in the housing, securely tighten the socket head bolts in the rotor, ensuring there is not a gap at the split line.

9. Before replacing the pillow block cap, gently spin the shaft by hand to ensure the seal and the bearings rotate freely. Also, visually inspect that the seal, shaft, bearing, and all other components are aligned and the outer o-ring on the seal is intact. Make sure the notch on top of the stator is at the 12 o'clock position (Figure 8).

10. Make a final inspection to make sure there is no debris or other contaminants in the pillow block before replacing the pillow block cap. Tighten the cap bolts and carefully inspect the sealing area, making sure no damage has occurred during installation. Confirm that the assembly rotates freely by gently spinning the shaft by hand (Figure 9).

NEVER flood or submerge the seal. These conditions will cause the seal to fail.

For additional information please contact Garlock at 1-800-448-6688



Figure 7

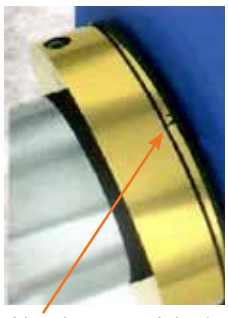

Notch at 12 o'clock position

Figure 8



Figure 9

GARLOCK KLOZURE BEARING ISOLATOR APPLICATION DATA SHEET

CONTACT INFORMATION

Name: Phone:

Email :

EQUIPMENT TYPE: Pump Motor Other:

Manufacturer:

Model Number:

PREVIOUS SEAL DESIGN: Oil Seal Bearing Isolator Other:

Seal Manufacturer: Quantity Required:

Seal Part Number:

SEAL DESIGN: Solid Split

Mounting Method: Cam-Lock O-ring System Epoxy Mount Bolting Flange

Construction Material: Bronze 316SS

Seal Purpose: Contamination Exclusion Lubrication Retention Shaft Grounding

APPLICATION CONDITIONS:

Speed: RPM fpm mps

Temperature: F C

Pressure: psi bar

TIR (total indicated runout): in. mm

Axial Movement: in. mm

Shaft Orientation: Horizontal Vertical Top Vertical Bottom

Lubrication Method: Grease Oil Sump Air Oil Oil Mist

Lubrication Fill Level: Below Shaft Mid Shaft Submerged Shaft

Media/External Contamination: Dust/Dirt Water Washdown

Media Manufacturer:

Media Product Name:

NOTES:

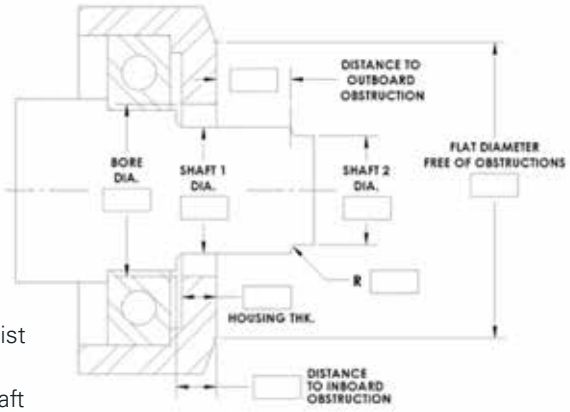

GUARDIAN	Features	Materials	IP Rating	Temp	Shaft Diameter in. (mm)	Surface Speed	Axial Motion in. (mm)	Misalign & Runout in. (mm)	Pressure
Flanged 29602, 29604 	• Meets NEMA MG 1-2003 • Surpasses IEEE 841-2001 test standards • Conforms to API 610 (Bronze only) • No arbor press required for installation • No internal metal-to-metal contact	• Bronze or 316 stainless steel construction • Filled PTFE unitizing ring • Fluoroelastomer O-rings standard	IP 66	-22°F (-30°C) to 400°F (204°C)	0.875 to 10.500 (22.2 to 266.7)	12,000 f/m (60.9 m/s)	±0.025 (0.64)	±0.020 (0.51)	Zero Differential
Small Cross Section 29606, 29607, 29608 	• Meets NEMA MG 1-2003 • Meets IEEE 841-2001 test standards • Conforms to API 610 (Bronze only) • No arbor press required for installation • No internal metal-to-metal contact • Fits in c/s as small as 0.188" (4.76mm)	• Bronze or 316 stainless steel construction • Filled PTFE unitizing ring • Fluoroelastomer O-rings standard	IP 65	-22°F (-30°C) to 400°F (204°C)	0.875 to 5.500 (22.2 to 139.7)	12,000 f/m (60.9 m/s)	±0.015 (0.38)	±0.010 (0.25)	Zero Differential
Flangeless Narrow Width 29609, 29611 	• Meets NEMA MG 1-2003 • Meets IEEE 841-2001 test standards • Conforms to API 610 (Bronze only) • No arbor press required for installation • No internal metal-to-metal contact • Flangeless design fits in spaces as narrow as 0.375" (9.53mm)	• Bronze or 316 stainless steel construction • Filled PTFE unitizing ring • Fluoroelastomer O-rings standard	IP 65	-22°F (-30°C) to 400°F (204°C)	0.875 to 5.500 (22.2 to 139.7)	12,000 f/m (60.9 m/s)	±0.015 (0.38)	±0.010 (0.25)	Zero Differential
Flangeless 29612, 29619 	• Meets NEMA MG 1-2003 • Meets IEEE 841-2001 test standards • Conforms to API 610 (Bronze only) • No arbor press required for installation • No internal metal-to-metal contact • Does not extend past face of housing	• Bronze or 316 stainless steel construction • Filled PTFE unitizing ring • Fluoroelastomer O-rings standard	IP 65	-22°F (-30°C) to 400°F (204°C)	0.875 to 5.500 (22.2 to 139.7)	12,000 f/m (60.9 m/s)	±0.025 (0.64)	±0.020 (0.51)	Zero Differential
Split Pillow Block 29616, 29617*** 	• Meets NEMA MG 1-2003 • Surpasses IEEE 841-2001 test standards • Conforms to API 610 (Bronze only) • No arbor press required for installation • No internal metal-to-metal contact • Standard and custom design for split pillow blocks	• Bronze or 316 stainless steel construction • Filled PTFE unitizing ring • Fluoroelastomer O-rings standard	IP 66	-22°F (-30°C) to 400°F (204°C)	0.875 to 5.500 (22.2 to 139.7)	12,000 f/m (60.9 m/s)	±0.025 (0.64)	±0.020 (0.51)	Zero Differential
Vertical 29620, 29621, 29622, 29623 	• Meets NEMA MG 1-2003 • Surpasses IEEE 841-2001 test standards • Conforms to API 610 (Bronze only) • No arbor press required for installation • No internal metal-to-metal contact • Fits in c/s as small as 0.188 in. (4.76mm) • Vertical design for top applications only	• Bronze or 316 stainless steel construction • Filled PTFE unitizing ring • Fluoroelastomer O-rings standard	29620 IP 66 29621 IP 65	-22°F (-30°C) to 400°F (204°C)	0.875 to 5.500 (22.2 to 139.7)	12,000 f/m (60.9 m/s)	Std: ±0.025 (0.64) Small C/S: ±0.015 (0.38)	Std: ±0.020 (0.51) Small C/S: ±0.010 (0.25)	Zero Differential

* Temperature rating based on standard fluoroelastomer o-rings
** For larger or smaller shaft diameters, please contact KLOZURE
*** Solid seal for split pillow block application

Split GUARDIAN	Features	Materials	IP Rating	Temp	Shaft Diameter in. (mm)	Surface Speed	Axial Motion in. (mm)	Misalign & Runout in. (mm)	Pressure
Flanged 29702 	• Meets NEMA MG 1-2003 • Surpasses IEEE 841-2001 test standards • Conforms to API 610 (Bronze only) • No arbor press required for installation • No internal metal-to-metal contact • Split design allows for installation without disassembly of equipment	• Bronze or 316 stainless steel construction • Filled PTFE unitizing ring • Fluoroelastomer O-rings standard	IP 65	-22°F (-30°C) to 400°F (204°C)	0.875 to 5.500 (22.2 to 139.7)	4,500 f/m (22.9 m/s)	±0.025 (0.64)	±0.020 (0.51)	Zero Differential
Split Pillow Block 29716*** 	• Meets NEMA MG 1-2003 • Surpasses IEEE 841-2001 test standards • Conforms to API 610 (Bronze only) • No arbor press required for installation • No internal metal-to-metal contact • Standard and custom design for split pillow blocks • Split design allows for installation without disassembly of equipment	• Bronze or 316 stainless steel construction • Filled PTFE unitizing ring • Fluoroelastomer O-rings standard	IP 65	-22°F (-30°C) to 400°F (204°C)	0.875 to 5.500 (22.2 to 139.7)	4,500 f/m (22.9 m/s)	±0.025 (0.64)	±0.020 (0.51)	Zero Differential

* Temperature rating based on standard fluoroelastomer o-rings
** For larger or smaller shaft diameters, please contact KLOZURE
*** Solid seal for split pillow block application

MICRO-TEC II	Features	Materials	IP Rating	Temp	Shaft Diameter in. (mm)	Surface Speed	Axial Motion in. (mm)	Misalign & Runout in. (mm)	Pressure
Flanged 21902, 21906 	• Unique microcellular technology • Protects against severely dusty environments • Meets NEMA MG 1-2003 • Surpasses IEEE 841-2001 test standards • Conforms to API 610 (Bronze only) • No arbor press required for installation • No internal metal-to-metal contact	• Bronze or 316 stainless steel construction • Silicone foam • Filled PTFE unitizing ring • Fluoroelastomer O-rings standard	IP 66	-22°F (-30°C) to 400°F (204°C)	0.875 to 5.500 (22.2 to 139.7)	4,500 f/m (22.9 m/s)	±0.025 (0.64)	±0.020 (0.51)	Zero Differential
Small Cross Section 29104, 29107 	• Unique microcellular technology • Protects against severely dusty environments • Meets NEMA MG 1-2003 • Meets IEEE 841-2001 test standards • Conforms to API 610 (Bronze only) • No arbor press required for installation • No internal metal-to-metal contact • Fits in c/s as small as 0.188" (4.76mm)	• Bronze or 316 stainless steel construction • Silicone foam • Filled PTFE unitizing ring • Fluoroelastomer O-rings standard	IP 65	-22°F (-30°C) to 400°F (204°C)	0.875 to 5.500 (22.2 to 139.7)	4,500 f/m (22.9 m/s)	±0.015 (0.38)	±0.010 (0.25)	Zero Differential
Flangeless 29112, 29119 	• Unique microcellular technology • Protects against severely dusty environments • Meets NEMA MG 1-2003 • Meets IEEE 841-2001 test standards • Conforms to API 610 (Bronze only) • No arbor press required for installation • No internal metal-to-metal contact • Does not extend past face of housing	• Bronze or 316 stainless steel construction • Filled PTFE unitizing ring • Fluoroelastomer O-rings standard	IP 65	-22°F (-30°C) to 400°F (204°C)	0.875 to 5.500 (22.2 to 139.7)	4,500 f/m (22.9 m/s)	±0.025 (0.64)	±0.020 (0.51)	Zero Differential

* Temperature rating based on standard fluoroelastomer o-rings
** For larger or smaller shaft diameters, please contact KLOZURE
*** Solid seal for split pillow block application

MICRO-TEC II	Features	Materials	IP Rating	Temp	Shaft Diameter in. (mm)	Surface Speed	Axial Motion in. (mm)	Misalign & Runout in. (mm)	Pressure
Split Pillow Block 29116, 29117*** 	• Unique microcellular technology • Protects against severely dusty environments • Meets NEMA MG 1-2003 • Surpasses IEEE 841-2001 test standards • Conforms to API 610 (Bronze only) • No arbor press required for installation • No internal metal-to-metal contact • Standard and custom design for split pillow blocks	• Bronze or 316 stainless steel construction • Silicone foam • Filled PTFE unitizing ring • Fluoroelastomer O-rings standard	IP 66	-22°F (-30°C) to 400°F (204°C)	0.875 to 5.500 (22.2 to 139.7)	4,500 f/m (22.9 m/s)	±0.025 (0.64)	±0.020 (0.51)	Zero Differential
Vertical 29120, 29121, 29122, 29123 	• Unique microcellular technology • Protects against severely dusty environments • Meets NEMA MG 1-2003 • Surpasses IEEE 841-2001 test standards • Conforms to API 610 (Bronze only) • No arbor press required for installation • No internal metal-to-metal contact • Standard and custom design for split pillow blocks	• Bronze or 316 stainless steel construction • Silicone foam • Filled PTFE unitizing ring • Fluoroelastomer O-rings standard	Std: IP 66 Small c/s: IP 65	-22°F (-30°C) to 400°F (204°C)	0.875 to 5.500 (22.2 to 139.7)	4,500 f/m (22.9 m/s)	Std: ±0.025 (0.64) Small c/s: ±0.015 (0.38)	Std: ±0.020 (0.51) Small c/s: ±0.010 (0.25)	Zero Differential

* Temperature rating based on standard fluoroelastomer o-rings
** For larger or smaller shaft diameters, please contact KLOZURE
*** Solid seal for split pillow block application

MT - 180	Features	Materials	IP Rating	Temp	Shaft Diameter in. (mm)	Surface Speed	Axial Motion in. (mm)	Misalign & Runout in. (mm)	Pressure
Flanged 29202 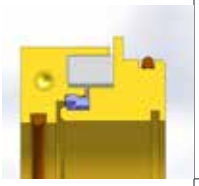	• Split Design allows for installation without disassembly of equipment. • Unique microcellular technology protects against severely dust environments • Meets NEMA-MG 1-2003 • Conforms to API 610 (Bronze only) • No arbor press required for installation • No internal metal-to-metal contact	• Bronze or 316 SS construction • Filled PTFE unitizing ring • Fluoroelastomer O-ring standard • Silicone Foam	IP 65	-22°F (-30°C) to 400°F (204°C)	0.875 to 5.500 (22.2 to 139.7)	4,500 f/m (22.9 m/s)	±0.025 (0.64)	±0.020 (0.51)	Zero Differential
Split Pillow Block 29216 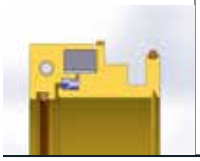	• Split Design allows for installation without disassembly of equipment. • Unique microcellular technology protects against severely dust environments • Meets NEMA-MG 1-2003 • Meets IEEE 841-2001 test standards • Conforms to API 610 (Bronze only) • No arbor press required for installation • No internal metal-to-metal contact • Standard and custom designs for split pillow blocks	• Bronze or 316 SS construction • Filled PTFE unitizing ring • Fluoroelastomer O-ring standard • Silicone Foam	IP 65	-22°F (-30°C) to 400°F (204°C)	0.875 to 5.500 (22.2 to 139.7)	4,500 f/m (22.9 m/s)	±0.025 (0.64)	±0.020 (0.51)	Zero Differential

* Temperature rating based on standard fluoroelastomer o-rings
** For larger or smaller shaft diameters, please contact KLOZURE
*** Solid seal for split pillow block application

SGi	Features	Materials	IP Rating	Temp	Shaft Diameter in. (mm)	Surface Speed	Axial Motion in. (mm)	Misalign & Runout in. (mm)	Pressure
Flanged 29802 	• Meets NEMA-MG 1-2003 • Meets IEEE 841-2001 test standards • Arbor press required for installation • No internal metal-to-metal contact	• Bronze or 316 SS construction • Filled PTFE unitizing ring • Fluoroelastomer O-ring standard • AEGIS Shaft Grounding Ring	IP 66	-22°F (-30°C) to 300°F (149°C)	0.875 to 6.000 (22.2 to 152.4)	12,000 f/m (61.1 m/s)	±0.025 (0.64)	±0.020 (0.51)	Zero Differential
Flangeless 29819 	• Meets NEMA-MG 1-2003 • Meets IEEE 841-2001 test standards • Arbor press required for installation • No internal metal-to-metal contact	• Bronze or 316 SS construction • Filled PTFE unitizing ring • Fluoroelastomer O-ring standard • AEGIS Shaft Grounding Ring	IP 65	-22°F (-30°C) to 300°F (149°C)	0.875 to 6.000 (22.2 to 152.4)	12,000 f/m (61.1 m/s)	±0.025 (0.64)	±0.020 (0.51)	Zero Differential

SGi - 180	Features	Materials	IP Rating	Temp	Shaft Diameter in. (mm)	Surface Speed	Axial Motion in. (mm)	Misalign & Runout in. (mm)	Pressure
Flanged 29902 	• Split Design allows for installation without disassembly of equipment. • Meets NEMA-MG 1-2003 • Meets IEEE 841-2001 test standards • Arbor press required for installation • No internal metal-to-metal contact	• Bronze or 316 SS construction • Filled PTFE unitizing ring • Fluoroelastomer O-ring standard • AEGIS Shaft Grounding Ring	IP 65	-22°F (-30°C) to 300°F (149°C)	0.875 to 6.000 (22.2 to 152.4)	4,500 f/m (22.9 m/s)	±0.025 (0.64)	±0.020 (0.51)	Zero Differential
Flangeless 29919 	• Split Design allows for installation without disassembly of equipment. • Meets NEMA-MG 1-2003 • Meets IEEE 841-2001 test standards • Arbor press required for installation • No internal metal-to-metal contact	• Bronze or 316 SS construction • Filled PTFE unitizing ring • Fluoroelastomer O-ring standard • AEGIS®Shaft Grounding Ring	IP 65	-22°F (-30°C) to 300°F (149°C)	0.875 to 6.000 (22.2 to 152.4)	12,000 f/m (61.1 m/s)	±0.025 (0.64)	±0.020 (0.51)	Zero Differential

* Temperature rating based on standard fluoroelastomer o-rings
** For larger or smaller shaft diameters, please contact KLOZURE
*** Solid seal for split pillow block application

ISO-GARD	Features	Materials	IP Rating	Temp	Shaft Diameter in. (mm)	Surface Speed	Axial Motion in. (mm)	Misalign & Runout in. (mm)	Pressure
Flanged 29500, 29502 	• Filled PTFE construction • Excellent chemical resistance • Meets NEMA MG 1-2003 • Meets IEEE 841-2001 test standards • No arbor press required for installation	• FDA compliant blue glass filled PTFE • Fluoroelastomer O-rings standard	IP 55	-22°F (-30°C) to 400°F (204°C)	0.875 to 11.000 (22.2 to 279.4)	4,500 f/m (22.9 m/s)	±0.015 (0.38)	±0.020 (0.51)	Zero Differential
Small Cross Section 29507 	• Filled PTFE construction • Excellent chemical resistance • Meets NEMA MG 1-2003 • Meets IEEE 841-2001 test standards • No arbor press required for installation • Fits in c/s as small as 0,188" (4.76mm)	• FDA compliant blue glass filled PTFE • Fluoroelastomer O-rings standard	IP 55	-22°F (-30°C) to 400°F (204°C)	0.875 to 11.000 (22.2 to 279.4)	4,500 f/m (22.9 m/s)	±0.015 (0.38)	±0.020 (0.51)	Zero Differential
Flangeless 29519 	• Filled PTFE construction • Excellent chemical resistance • Meets NEMA MG 1-2003 • Meets IEEE 841-2001 test standards • No arbor press required for installation • Does not extend past face of housing	• FDA compliant blue glass filled PTFE • Fluoroelastomer O-rings standard	IP 55	-22°F (-30°C) to 400°F (204°C)	0.875 to 11.000 (22.2 to 279.4)	4,500 f/m (22.9 m/s)	±0.015 (0.38)	±0.020 (0.51)	Zero Differential
Split Pillow Block 29516 	• Filled PTFE construction • Excellent chemical resistance • Meets NEMA MG 1-2003 • Meets IEEE 841-2001 test standards • No arbor press required for installation • Standard and custom design for split pillow blocks	• FDA compliant blue glass filled PTFE • Fluoroelastomer O-rings standard	IP 55	-22°F (-30°C) to 400°F (204°C)	0.875 to 11.000 (22.2 to 279.4)	4,500 f/m (22.9 m/s)	±0.015 (0.38)	±0.020 (0.51)	Zero Differential
Vertical 29520, 29521 	• Filled PTFE construction • Excellent chemical resistance • Meets NEMA MG 1-2003 • Meets IEEE 841-2001 test standards • No arbor press required for installation • Style 29521 offers two O.D. O-Rings for increased retention in the bore • Vertical design for top applications only	• FDA compliant blue glass filled PTFE • Fluoroelastomer O-rings standard	IP 55	-22°F (-30°C) to 400°F (204°C)	0.875 to 11.000 (22.2 to 279.4)	4,500 f/m (22.9 m/s)	±0.015 (0.38)	±0.020 (0.51)	Zero Differential

* Temperature rating based on standard fluoroelastomer o-rings
** For larger or smaller shaft diameters, please contact KLOZURE
*** Solid seal for split pillow block application

REFERENCE DIMENSIONS

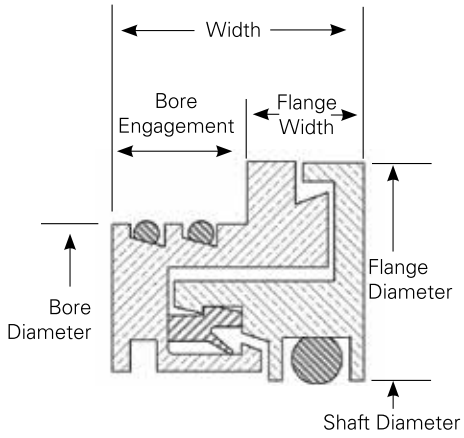

BEARING ISOLATOR SELECTION GUIDE

GUARDIAN

Code Prefix	Description	Material	Width	Flange Width	Bore Engagement	IP Rating	Inboard Drainport	Outboard Drainport
29602	Flanged	Bronze	0.700 (17.8 mm)	0.325 (8.3 mm)	0.375 (9.5 mm)	66	Yes	Yes
29604	Flanged	316 Stainless Steel	0.700 (17.8 mm)	0.325 (8.3 mm)	0.375 (9.5 mm)	66	Yes	Yes
29606	Small Cross Section	316 Stainless Steel	0.625 (15.9 mm)	0.375 (9.5 mm)	0.250 (6.4 mm)	55	Yes	Yes
29607	Small Cross Section	Bronze	0.625 (15.9 mm)	0.375 (9.5 mm)	0.250 (6.4 mm)	55	Yes	Yes
29608	Small Cross Section, Short Flange	Bronze	0.625 (15.9 mm)	0.250 (6.4 mm)	0.375 (9.5 mm)	55	Yes	Yes
29609	Narrow Width Flangeless	Bronze	0.375 (9.5 mm)	N/A	0.375 (9.5 mm)	55	Yes	No
29610	Small Flanged	Bronze	0.700 (17.8 mm)	0.325 (8.3 mm)	0.375 (9.5 mm)	55	Yes	Yes
29611	Narrow Width Flangeless	316 Stainless Steel	0.375 (9.5 mm)	N/A	0.375 (9.5 mm)	55	No	No
29612	Flangeless	316 Stainless Steel	0.625 (15.9 mm)	N/A	0.625 (15.9 mm)	55	Yes	No
29616	Split Pillow Block	Bronze	Various*	0.500 (12.7 mm)*	Various*	56	Yes	Yes
29617	Split Pillow Block	316 Stainless Steel	Various*	0.500 (12.7 mm)*	Various*	56	Yes	Yes
29619	Flangeless	Bronze	0.625 (15.9 mm)	N/A	0.625 (15.9 mm)	55	Yes	No
29620	Vertical	Bronze	0.700 (17.8 mm)	0.325 (8.3 mm)	0.375 (9.5 mm)	56	No	No
29621	Vertical - Small Cross Section	Bronze	0.625 (15.9 mm)	0.375 (9.5 mm)	0.250 (6.4 mm)	55	No	No
29622	Vertical	316 Stainless Steel	0.700 (17.8 mm)	0.325 (8.3 mm)	0.375 (9.5 mm)	56	No	No
29623	Vertical - Small Cross Section	316 Stainless Steel	0.625 (15.9 mm)	0.375 (9.5 mm)	0.250 (6.4 mm)	55	No	No
29680	Flanged	Bronze	0.875 (22.2mm) Y Y	0.375 (9.5mm)	0.5 (12.7mm)	56	Yes	Yes
29681	Flanged	316SS	0.875 (22.2mm)	0.375 (9.5mm)	0.5 (12.7mm)	56	Yes	Yes
29682	Flangeless	Bronze	0.875 (22.2mm)	NA	0.875 (22.2mm)	55	Yes	Yes
29683	Flangeless	316SS	0.875 (22.2mm)	NA	0.875 (22.2mm)	55	Yes	Yes

REFERENCE DIMENSIONS

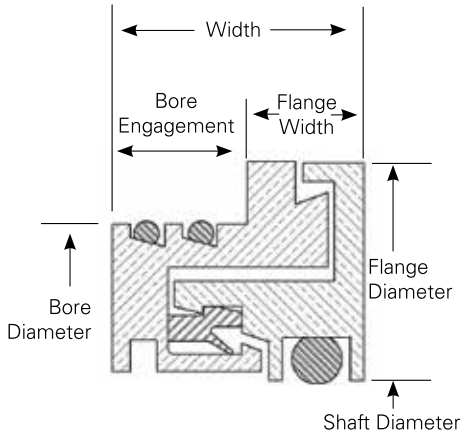

	Code Prefix	Description	Material	Width	Flange Width	Bore Engagement	IP Rating	Inboard Drainport	Outboard Drainport
Split GUARDIAN	29702	Flanged	Bronze	1.150 (29.2 mm)	0.775 (19.7 mm)	0.375 (9.5 mm)	65	Yes	No
	29716	Split Pillow Block	Bronze	Various*	0.775 (19.7mm)*	Various*	65	Yes	No
	Code Prefix	Description	Material	Width	Flange Width	Bore Engagement	IP Rating	Inboard Drainport	Outboard Drainport
MICRO-TEC II	29102	Flanged	Bronze	0.700 (17.8 mm)	0.325 (8.3 mm)	0.375 (9.5 mm)	56	Yes	Yes
	29104	Small Cross Section	316 Stainless Steel	0.625 (15.9 mm)	0.375 (8.3 mm)	0.250 (6.4 mm)	55	Yes	Yes
	29106	Flanged	316 Stainless Steel	0.700 (17.8 mm)	0.325 (8.3 mm)	0.375 (9.5 mm)	56	Yes	Yes
	29107	Small Cross Section	Bronze	0.625 (15.9 mm)	0.375 (9.5 mm)	0.250 (6.4 mm)	55	Yes	Yes
	29112	Flangeless	316 Stainless Steel	0.625 (15.9 mm)	N/A	0.625 (15.9 mm)	55	Yes	No
	29116	Split Pillow Block	Bronze	Various*	0.500 (12.7 mm)*	Various*	56	Yes	Yes
	29117	Split Pillow Block	316 Stainless Steel	Various*	0.500 (12.7 mm)*	Various*	56	Yes	Yes
	29119	Flangeless	Bronze	0.625 (15.9 mm)	N/A	0.625 (15.9 mm)	55	Yes	No
	29120	Vertical	Bronze	0.700 (17.8 mm)	0.325 (8.3 mm)	0.375 (9.5 mm)	56	No	No
	29121	Vertical - Small Cross Section	Bronze	0.625 (15.9 mm)	0.375 (9.5 mm)	0.250 (6.4 mm)	55	No	No
	29122	Vertical	316 Stainless Steel	0.700 (17.8 mm)	0.325 (8.3 mm)	0.375 (9.5 mm)	56	No	No
	29123	Vertical - Small Cross Section	316 Stainless Steel	0.625 (15.9 mm)	0.375 (9.5 mm)	0.250 (6.4 mm)	55	No	No
	Code Prefix	Description	Material	Width	Flange Width	Bore Engagement	IP Rating	Inboard Drainport	Outboard Drainport
MT-180	29202	Flanged	Bronze	0.982 (24.9 mm)	0.607" (15.4 mm)	0.375" (9.5 mm)	55	Yes	No
	29216	Split Pillow Block	Bronze	Various*	0.607" (15.4 mm)	Various*	55	Yes	No

REFERENCE DIMENSIONS

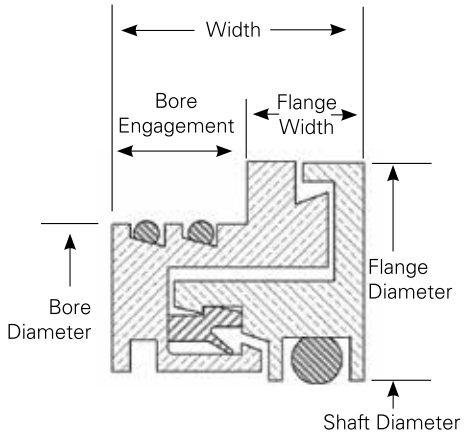

	Code Prefix	Description	Material	Width	Flange Width	Bore Engagement	IP Rating	Inboard Drainport	Outboard Drainport
SGi	29802	Flanged	Bronze	0.570 (14.5 mm)	0.195 (5.0 mm)	0.375 (9.5 mm)	56	Yes	Yes
	29819	Flangeless	Bronze	0.570 (14.5 mm)	N/A	0.570 (14.5 mm)	55	Yes	No

	Code Prefix	Description	Material	Width	Flange Width	Bore Engagement	IP Rating	Inboard Drainport	Outboard Drainport
SGi - 180	29902	Flanged	Bronze	0.905" (23.0 mm)	0.530" (13.5 mm)	0.375" (9.5 mm)	55	Yes	No
	29919	Flangeless	Bronze	0.905" (23.0 mm)	N/A	0.905" (23.0 mm)	55	Yes	No

	Code Prefix	Description	Material	Width	Flange Width	Bore Engagement	IP Rating	Inboard Drainport	Outboard Drainport
ISO-GARD	29500	Flanged 2 O.D. O-Rings	Glass Filled PTFE	0.750 (19.1 mm)	0.250 (6.4 mm)	0.500 (12.7 mm)	55	Yes	Yes
	29502	Flanged	Glass Filled PTFE	0.750 (19.1 mm)	0.375 (9.5 mm)	0.375 (9.5 mm)	55	Yes	Yes
	29507	Small Cross Section	Glass Filled PTFE	0.625 (15.9 mm)	0.375 (9.5 mm)	0.250 (6.4 mm)	55	Yes	Yes
	29516	Split Pillow Block	Glass Filled PTFE	Various*	0.500 (12.7 mm)*	Various*	55	Yes	Yes
	29519	Flangeless	Glass Filled PTFE	0.640 (16.3 mm)	N/A	0.640 (16.3 mm)	55	Yes	No
	29520	Vertical	Glass Filled PTFE	0.760 (19.3 mm)	0.385 (9.8 mm)	0.375 (9.5 mm)	55	No	No
	29521	Vertical - Two O.D. O-Rings	Glass Filled PTFE	0.885 (22.5 mm)	0.385 (9.8 mm)	0.500 (12.7 mm)	55	No	No

* Pillow Block Dependent
* Application Dependent
NOTE: Flange width is a reference dimension depending on installation and misalignment at application

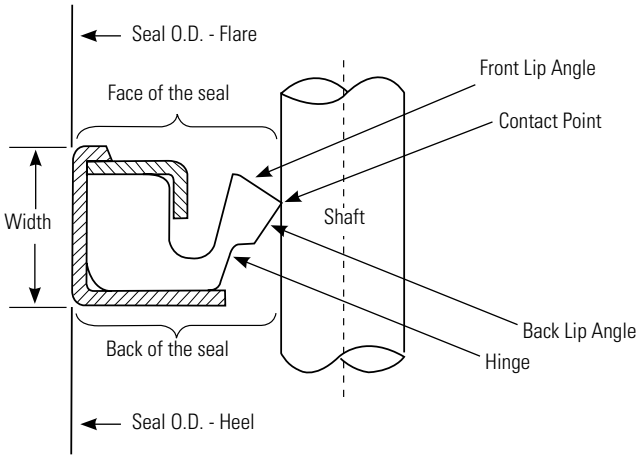

ASSEMBLED SEAL:
A group of parts, which includes sealing surface(s), provisions for initial loading, and a secondary sealing mechanism that accommodates the radial movement necessary for installation and operation.

AXIAL CLEARANCE:
The gap between the element heel and seal lip.

BACK LIP ANGLE:
The angle seen from the back of the seal coincident of the seal interface.

BEARING ISOLATOR:
Sealing technology that uses labyrinth sealing methods in conjunction with other methods to provide a high-performance sealing solution.

BONDED SEAL:
Seal assembly where the insert and/or spring is bonded to the elastomer element.

CONTACT POINT:
The interface where the sealing element reacts dynamically with the shaft or bore housing.

CONTACT LINE HEIGHT:
The axial distance from the seal face to the contact point.

CONTACT WIDTH:
The amount of area that is reacting dynamically in the axial direction.

DYNAMIC RUNOUT:
Twice the distance the center of the shaft is displaced from the center of rotation and expressed in TIR. That runout to which the seal lip is subjected due to the outside diameter of the shaft not rotating in a true circle.

ELASTOMER:
Synthetic and natural products able to be vulcanized and capable of being elongated at least double their original length at room temperature but return to their approximate length when released.

END PLAY:
A measure of axial movement encountered or allowed, usually in reference to the shaft on which the seal lip contacts.

FACE LIP ANGLE:
The angle seen from the face of the seal coincident of the seal interface.

FLUID SIDE:
Typically, referred to the face of the seal when the primary sealing objective is to retain lubricant, but can be the back of the seal when the primary sealing objective is to exclude contamination.

GARTER SPRING:
A helically coiled wire with its ends connected to form a ring. Close wound can be used in tension or open wound used in compression for maintaining a radial sealing force between the element of a radial lip seal and a shaft or bore.

HEEL:
The portion of a lip seal case located tangent to the back of the seal.

HINGE:
The point at which the seal lip pivots about the seal assembly.

HOUSING BORE:
A cylindrical surface which mates with the outside diameter of the seal outer case (standard lip seal) or the external contact lip (external lip seal).

INCLUSION:
Retaining lubricant by facing the seal in toward the lubricant.

INNER CASE:
A rigid, cup shaped component of a seal assembly used as one or more of the following: reinforcing member, shield, spring retainer, and lip-clamping device.

LABYRINTH SEAL:
Seal which uses a torturous pathway to both exclude debris & retain lubricant.

LIP DIAMETER:
The most inner diameter of the seal lip, measured with the spring installed.

LIP LOAD:
The radial force exerted by the seal lip geometry as well as any spring loading. Lip load is expressed as force per unit of shaft circumference.

LIP SEAL:
An elastomeric element which prevents leakage in dynamic and static applications through means of geometry and loading.

LUBRICANT STARVATION:
Lack of proper lubrication at the seal interface which may cause premature wear.

MILL-RIGHT ES:

A Garlock KLOZURE® proprietary formulation of hydrogenated nitrile (HNBR). Engineered specifically for high-performance applications that demand the tightest sealing system, the longest service life, and constant operation within extremely harsh chemical environments. Hydrogenated nitrile is the general name for hydrogenated acrylonitrile butadiene terpolymer.

MILL-RIGHT N:

A Garlock KLOZURE® proprietary formulation of nitrile (NBR). Engineered specifically for high-performance applications that demand the tightest sealing system, the longest service life, and constant operation within extremely harsh chemical environments. Nitrile is the general name for acrylonitrile butadiene terpolymer.

MILL-RIGHT V:

A Garlock KLOZURE® proprietary formulation of fluoroelastomer (FKM). Engineered specifically for high-performance applications that demand the tightest sealing system, the longest service life, and constant operation within extremely harsh chemical environments. Fluoroelastomer is the general name for vinylidene fluoride and hexafluoropropylene copolymer.

OFFSET:

The radial distance between center line of seal bore and the center line of the shaft rotation.

OUTER CASE:

The rigid structure of the lip-seal assembly which houses all components of the seal assembly.

PLUNGE GROUND:

The surface texture of a shaft or wear sleeve produced by introducing a grinding wheel perpendicular to the rotating shaft without axial motion.

PRIMARY LIP:

The elastomeric sealing element which typically rides against the rotating surface facing in toward the lubricant for lubricant inclusion or out away from the lubricant for contamination exclusion.

RADIAL LIP SEAL:

An assembly containing an elastomeric element which prevents leakage in dynamic and static applications through means of geometry and loading.

RADIAL LOAD:

The radial force exerted by the seal lip geometry as well as any spring loading. Lip load is expressed as force per unit of shaft circumference.

ROUGHNESS:

Irregularities in shaft surface texture which result from the production process. (See SAE J448a [June, 1963].)

SEAL CASE:

A rigid member to which the elastomeric element is attached.

SEAL OUTER DIAMETER (O.D.):

The external diameter of a lip seal assembly, which interfaces with the housing bore diameter.

SHAFT ECCENTRICITY:

The radial distance which the geometric center line of the shaft is displaced from the axis of shaft rotation.

SHAFT LEAD:

Helical grooves on a shaft surface caused by relative axial movement of the grinding wheel to shaft.

"SLIP-STICK":

A friction related phenomena in which the sealing element tends to adhere and rotate with the shaft surface momentarily until the elastic characteristics of the sealing element overcome the adhesive force, causing the seal lip to lose contact with the rotating surface long enough to allow leakage. This cycle repeats itself continuously and is normally associated with non-lubricated and boundary lubricated conditions.

SPRING GROOVE:

A depression formed in the head section of the seal. It is generally semicircular in form and serves to accommodate and locate the garter spring.

SPRING RETAINING LIP:

The portion of the primary lip that restricts the axial movement of the extension spring from a predetermined position.

SURFACE FINISH:

A term used to describe the quality, appearance, and/or characteristics of the shaft surface resulting from operations such as grinding, polishing, burnishing, etc. See SAE J488a (June, 1963) for additional information.

UNIDIRECTIONAL/ UNIROTATIONAL SEAL:

A seal designed for applications having a single direction of shaft rotation.

UNITIZED SEAL:

A seal assembly in which all components necessary for accomplishing the complete sealing function are retained in a single package.

VOLUME SWELL:

Increase in physical size caused by the absorption of the fluid the elastomer is immersed in.

WEAR SLEEVE:

A replaceable metal sleeve generally used in assemblies to eliminate expensive shaft replacement due to grooving from contamination at the seal-shaft interface.

WEEPAGE:

A minute amount of liquid leakage by a seal.

PRODUCT IDENTIFICATION BY MODEL

Model	Prefix	Seal Material	Description
21	25001	MILL-RIGHT N	SPLIT
	25002	SILICONE	SPLIT
	25008	MILL-RIGHT V	SPLIT
	25018	MILL-RIGHT ES	SPLIT
23	25003	MILL-RIGHT N	SPLIT
	25004	SILICONE	SPLIT
	25006	MILL-RIGHT V	SPLIT
	25010	MILL-RIGHT ES	SPLIT
24	25005	MILL-RIGHT N	SPLIT
	25029	MILL-RIGHT ES	SPLIT
	25030	MILL-RIGHT V	SPLIT
25	25056	PTFE	SOLID
	25058	PTFE	SPLIT
26	24600	MILL-RIGHT N	SOLID
	24602	MILL-RIGHT V	SOLID
	24610	MILL-RIGHT N	SPLIT
	24612	MILL-RIGHT V	SPLIT
	24626	MILL-RIGHT ES	SOLID
	24627	MILL-RIGHT ES	SPLIT
26E	24640	MILL-RIGHT N	SOLID
	24675	MILL-RIGHT ES	SOLID
	24642	MILL-RIGHT V	SOLID
26HR	24656	MILL-RIGHT ES	HIGH RUNOUT, SPLIT
	24660	MILL-RIGHT N	HIGH RUNOUT
	24662	MILL-RIGHT V	HIGH RUNOUT
	24663	MILL-RIGHT N	HIGH RUNOUT, SPLIT
	24664	MILL-RIGHT ES	HIGH RUNOUT, SOLID
26NS	24650	MILL-RIGHT N	NO SPRING
	24652	MILL-RIGHT V	NO SPRING
26R1	24606	MILL-RIGHT V	DUAL LIP, SPLIT
	24608	MILL-RIGHT N	DUAL LIP, SPLIT
	24620	MILL-RIGHT N	DUAL LIP, SOLID
	24622	MILL-RIGHT V	DUAL LIP, SOLID
	24629	MILL-RIGHT ES	DUAL LIP, SOLID
	24648	MILL-RIGHT ES	DUAL LIP, SPLIT
53	21086	MILL-RIGHT N	STD
	21095	SILICONE	STD
	21096	MILL-RIGHT ES	STD
	21699	MILL-RIGHT V	STD
53F1	22987	MILL-RIGHT N	STD
53G1	22500	MILL-RIGHT N	STD
	22501	MILL-RIGHT ES	STD
	22502	MILL-RIGHT V	STD

Model	Prefix	Seal Material	Description
53R1	22537	MILL-RIGHT N	STD
	22544	MILL-RIGHT ES	STD
	22543	MILL-RIGHT V	STD
53R2	22627	MILL-RIGHT N	STD
	22634	MILL-RIGHT ES	STD
	23708	MILL-RIGHT V	STD
53T2	22897	MILL-RIGHT N	STD
	22903	MILL-RIGHT V	STD
54	21140	MILL-RIGHT N	STD
57	26056	MILL-RIGHT N	STD
	26057	MILL-RIGHT V	STD
	26058	MILL-RIGHT ES	STD
58	21003	THERMO-CERAM	STD
	21005	THERMO-CERAM	316 SS CASE
59	24700	MILL-RIGHT N	STD
	24702	MILL-RIGHT V	STD
	24715	MILL-RIGHT ES	STD
59G1	24750	MILL-RIGHT N	GYLON EXCLUDER LIP
	24751	MILL-RIGHT ES	GYLON EXCLUDER LIP
	24752	MILL-RIGHT V	GYLON EXCLUDER LIP
62	21702	PTFE	STD
64	21238	MILL-RIGHT N	STD
	21243	SILICONE	STD
	21247	MILL-RIGHT ES	STD
	21852	MILL-RIGHT V	STD
64G1	22503	MILL-RIGHT N	GYLON EXCLUDER LIP
	22504	MILL-RIGHT ES	GYLON EXCLUDER LIP
	22505	MILL-RIGHT V	GYLON EXCLUDER LIP
87	26080	MILL-RIGHT N	STD, W/ RUBBER BUTTONS
	26081	MILL-RIGHT ES	STD, W/ RUBBER BUTTONS
	26097	MILL-RIGHT V	STD, W/ RUBBER BUTTONS
88	26088	MILL-RIGHT N	STD, W/ RUBBER BUTTONS
	26086	MILL-RIGHT ES	STD, W/ RUBBER BUTTONS
	26588	MILL-RIGHT V	STD, W/ RUBBER BUTTONS
88NS	26186	MILL-RIGHT ES	NO SPRING
	26188	MILL-RIGHT N	NO SPRING
143	21332	NITRILE	CUSTOM SPLIT FACE SEAL WITH HOSE CLAMP
143A1	21340	NITRILE	MODEL 143A1 FACE SEAL WITH HOSE CLAMP
	21339	MILL-RIGHT	MODEL 143A1 FACE SEAL WITH HOSE CLAMP
	21341	FLUOROELASTOMER	MODEL 143A1 FACE SEAL WITH HOSE CLAMP

APPENDIX A

PRODUCT IDENTIFICATION BY MODEL

Model	Prefix	Seal Material	Description
143A2	21333	NITRILE	MODEL 143A2 FACE SEAL WITH HOSE CLAMP
	21334	MILL-RIGHT	MODEL 143A2 FACE SEAL WITH HOSE CLAMP
	21335	FLUOROELASTOMER	MODEL 143A2 FACE SEAL WITH HOSE CLAMP
144W1	21342	MILL-RIGHT N	MODEL 144W1 SPLIT FACE SEAL
144W2	21343	MILL-RIGHT N	MODEL 144W2 SPLIT FACE SEAL
145A1	21700	NITRILE	STD
	21712	MILL-RIGHT	STD
	21722	FLUOROELASTOMER	STD
145A2	21750	NITRILE	STD
	21751	FLUOROELASTOMER	STD
	21754	MILL-RIGHT	STD

GYLON, MILL-RIGHT, P/S, GUARDIAN AND MICRO-TEC are registered trademarks of Garlock.
Please visit www.garlock.com for technical information.

NOTE: Please see appendix B for obsolete model number to part number conversion.

APPENDIX B

PRODUCT IDENTIFICATION BY PREFIX

Prefix	Model	Seal Material	DESCRIPTION
21003	58	THERMO-CERAM	STANDARD CONFIGURATION
21005	58	THERMO-CERAM	316 SS CASE
21086	53	MILL-RIGHT N	STANDARD CONFIGURATION
21095	53	SILICONE	STANDARD CONFIGURATION
21096	53	MILL-RIGHT ES	STANDARD CONFIGURATION
21140	54	MILL-RIGHT N	STANDARD CONFIGURATION
21238	64	MILL-RIGHT N	STANDARD CONFIGURATION
21243	64	SILICONE	STANDARD CONFIGURATION
21247	64	MILL-RIGHT ES	STANDARD CONFIGURATION
21332	143	NITRILE	MODEL 142 ELEMENT, FACE SEAL WITH HOSE CLAMP
21333	143	NITRILE	MODEL 145A2 ELEMENT, FACE SEAL WITH HOSE CLAMP
21334	143	MILL-RIGHT ES	MODEL 145A2 ELEMENT, FACE SEAL WITH HOSE CLAMP
21335	143	MILL-RIGHT V	MODEL 145A2 ELEMENT, FACE SEAL WITH HOSE CLAMP
21339	143	MILL-RIGHT ES	MODEL 145A1 ELEMENT, FACE SEAL WITH HOSE CLAMP
21340	143	NITRILE	MODEL 145A1 ELEMENT, FACE SEAL WITH HOSE CLAMP
21342	144W1	MILL-RIGHT N	MODEL 144W1 SPLIT FACE SEAL
21343	144W2	MILL-RIGHT N	MODEL 144W2 SPLIT FACE SEAL
21700	145A1	NITRILE	STANDARD CONFIGURATION
21702	62	PTFE	STANDARD CONFIGURATION
21712	145A1	MILL-RIGHT ES	STANDARD CONFIGURATION
21722	145A1	MILL-RIGHT V	STANDARD CONFIGURATION
21750	145A2	NITRILE	STANDARD CONFIGURATION
21751	145A2	MILL-RIGHT V	STANDARD CONFIGURATION
21754	145A2	MILL-RIGHT ES	STANDARD CONFIGURATION
21852	64	MILL-RIGHT V	STANDARD CONFIGURATION
22503	64G1	MILL-RIGHT N	GYLON EXCLUDER LIP
22504	64G1	MILL-RIGHT ES	GYLON EXCLUDER LIP
22505	64G1	MILL-RIGHT V	GYLON EXCLUDER LIP
22537	53R1	MILL-RIGHT N	STANDARD CONFIGURATION
22543	53R1	MILL-RIGHT V	STANDARD CONFIGURATION
23708	53R2	MILL-RIGHT V	STANDARD CONFIGURATION
24056	61	FDA GYLON	REVERSE LIP - FDA
24060	61	GYLON	GYLON LIP , FLUORO GASKET
24062	61	GYLON	DOUBLE TANDEM, GYLON LIP, FLUORO GASKET
24063	61	GYLON	DOUBLE OPPOSED, GYLON LIP, FLUORO GASKET
24064	61	GYLON	GYLON LIP, REVERSE LIP, FLUORO GASKET
24076	61	FDA GYLON	DOUBLE OPPOSED, GYLON LIP - FDA
24125	61	FDA GYLON	GYLON LIP - FDA

Prefix	Model	Seal Material	DESCRIPTION
24128	61	FDA GYLON	DOUBLE TANDEM, GYLON LIP - FDA
24600	26	MILL-RIGHT N	SOLID
24602	26	MILL-RIGHT V	SOLID
24606	26R1	MILL-RIGHT V	SPLIT , DUAL LIP
24608	26R1	MILL-RIGHT N	SPLIT, DUAL LIP
24610	26	MILL-RIGHT N	SPLIT
24612	26	MILL-RIGHT V	SPLIT
24620	26R1	MILL-RIGHT N	DUAL LIP, SOLID
24622	26R1	MILL-RIGHT V	DUAL LIP, SOLID
24626	26	MILL-RIGHT ES	SOLID
24627	26	MILL-RIGHT ES	SPLIT
24629	26R1	MILL-RIGHT ES	DUAL LIP, SOLID
24648	26R1	MILL-RIGHT ES	SPLIT, DUAL LIP
24650	26NS	MILL-RIGHT N	NO SPRING
24652	26NS	MILL-RIGHT V	NO SPRING
24656	26HR	MILL-RIGHT ES	HIGH RUNOUT, SPLIT
24660	26HR	MILL-RIGHT N	HIGH RUNOUT, SOLID
24662	26HR	MILL-RIGHT V	HIGH RUNOUT, SOLID
24663	26HR	MILL-RIGHT N	HIGH RUNOUT, SPLIT
24664	26HR	MILL-RIGHT ES	HIGH RUNOUT, SOLID
24700	59	MILL-RIGHT N	STANDARD CONFIGURATION
24702	59	MILL-RIGHT V	STANDARD CONFIGURATION
24715	59	MILL-RIGHT ES	STANDARD CONFIGURATION
24750	59G1	MILL-RIGHT N	GYLON EXCLUDER LIP
24751	59G1	MILL-RIGHT ES	GYLON EXCLUDER LIP
24752	59G1	MILL-RIGHT V	GYLON EXCLUDER LIP
25001	21	MILL-RIGHT N	SPLIT
25002	21	SILICONE	SPLIT
25003	23	MILL-RIGHT N	SPLIT
25004	23	SILICONE	SPLIT
25005	24	MILL-RIGHT N	SPLIT
25006	23	MILL-RIGHT V	SPLIT
25008	21	MILL-RIGHT V	SPLIT
25010	23	MILL-RIGHT ES	SPLIT
26056	57	MILL-RIGHT N	STANDARD CONFIGURATION
26057	57	MILL-RIGHT V	STANDARD CONFIGURATION
26058	57	MILL-RIGHT ES	STANDARD CONFIGURATION
26080	87	MILL-RIGHT N	STANDARD CONFIGURATION
26081	87	MILL-RIGHT ES	STANDARD CONFIGURATION
26088	88	MILL-RIGHT N	STANDARD CONFIGURATION
26097	87	MILL-RIGHT V	STANDARD CONFIGURATION
26186	88NS	MILL-RIGHT ES	NO SPRING
26188	88NS	MILL-RIGHT N	NO SPRING
26588	88	MILL-RIGHT V	STANDARD CONFIGURATION

APPENDIX B

PRODUCT IDENTIFICATION BY PREFIX

Prefix	Model	Seal Material	DESCRIPTION
26186	88NS	MILL-RIGHT ES	NO SPRING
26188	88NS	MILL-RIGHT N	NO SPRING
26588	88	MILL-RIGHT V	STANDARD CONFIGURATION
26186	88NS	MILL-RIGHT ES	NO SPRING
26188	88NS	MILL-RIGHT N	NO SPRING
26588	88	MILL-RIGHT V	STANDARD CONFIGURATION
27223	94	NITRILE	BONDED
27685	94	FLUOROELASTOMER	BONDED
MEC299	ALL SPECIAL/CUSTOM CONFIGS - SEE SPECIAL CODE BOOK		
MEC201	PS	Single Lip Standard	3530 Black Element FDA FKM Static Seal
MEC202	PS	Single Lip Standard	3510 White Element FDA FKM Static Seal
MEC203	PS	Single Lip Standard	3510 White Element 3510 White Static Seal
MEC204	PS	Single Lip Standard	3504 Blue Element FDA FKM Static Seal
MEC205	PS	Single Lip Standard	3504 Blue Element 3504 Blue Static Seal
MEC206	PS	Single Lip Standard	3549 Tan/White Element FDA FKM Static Seal
MEC207	PS	Single Lip Standard	3549 Tan/White Element 3510 White Static Seal
MEC208	PS	Single Lip Standard	3533 F Element FDA FKM Static Seal
MEC209	PS	Single Lip Standard	3533 F Element 3510 White Static Seal
MEC210	PS	Single Lip Reversed	3530 Black Element FDA FKM Static Seal
MEC211	PS	Single Lip Reversed	3510 White Element FDA FKM Static Seal
MEC212	PS	Single Lip Reversed	3510 White Element 3510 White Static Seal
MEC213	PS	Single Lip Reversed	3504 Blue Element FDA FKM Static Seal
MEC214	PS	Single Lip Reversed	3504 Blue Element 3504 Blue Static Seal
MEC215	PS	Single Lip Reversed	3549 Tan/White Element FDA FKM Static Seal
MEC216	PS	Single Lip Reversed	3549 Tan/White Element 3510 White Static Seal
MEC217	PS	Single Lip Reversed	3533 F Element FDA FKM Static Seal
MEC218	PS	Single Lip Reversed	3533 F Element 3510 White Static Seal
MEC219	PS	Dual Tandem	3530 Black Element FDA FKM Static Seal 3501 Support Ring
MEC220	PS	Dual Tandem	3510 White Element FDA FKM Static Seal 3510 Support Ring
MEC221	PS	Dual Tandem	3510 White Element 3510 White Static Seal 3510 Support Ring
MEC222	PS	Dual Tandem	3504 Blue Element FDA FKM Static Seal 3510 Support Ring
MEC223	PS	Dual Tandem	3504 Blue Element 3504 Blue Static Seal 3510 Support Ring
MEC224	PS	Dual Tandem	3549 Tan/White Element FDA FKM Static Seal 3510 Support Ring
MEC225	PS	Dual Tandem	3549 Tan/White Element 3510 White Static Seal 3510 Support Ring
MEC226	PS	Dual Tandem	3533 F Element FDA FKM Static Seal 3501 Support Ring
MEC227	PS	Dual Tandem	3533 F Element 3510 White Static Seal 3501 Support Ring
MEC228	PS	Dual Opposed	3530 Black Element FDA FKM Static Seal 3501 Support Ring
MEC229	PS	Dual Opposed	3510 White Element FDA FKM Static Seal 3510 Support Ring
MEC230	PS	Dual Opposed	3510 White Element 3510 White Static Seal 3510 Support Ring
MEC231	PS	Dual Opposed	3504 Blue Element FDA FKM Static Seal 3510 Support Ring
MEC232	PS	Dual Opposed	3504 Blue Element 3504 Blue Static Seal 3510 Support Ring
MEC233	PS	Dual Opposed	3549 Tan/White Element FDA FKM Static Seal 3510 Support Ring
MEC234	PS	Dual Opposed	3549 Tan/White Element 3510 White Static Seal 3510 Support Ring
MEC235	PS	Dual Opposed	3533 F Element FDA FKM Static Seal 3501 Support Ring
MEC236	PS	Dual Opposed	3533 F Element 3510 White Static Seal 3501 Support Ring

APPENDIX C

OBSOLETE PRODUCT IDENTIFICATION BY MODEL

OBSOLETE MODEL NUMBER TO PART NUMBER CONVERSION

Model	Prefix	Seal Material	DESCRIPTION
21	25051	MILL-RIGHT N	2 BUTT CUTS @ 180 DEG APART
	25068	SILICONE	2 BUTT CUTS @ 180 DEG APART
	25089	MILL-RIGHT N	RIGHT HAND BEVEL CUT
23	25044	MILL-RIGHT V	LEFT HAND BEVEL CUT
	25077	MILL-RIGHT N	SOLID, SPECIAL
	25080	SILICONE	2 BUTT CUTS @ 180 DEG APART
	25084	SILICONE	SOLID
	25090	SILICONE	RIGHT HAND CUT
	25156	MILL-RIGHT N	SOLID, SPECIAL
	25157	SILICONE	SEMI-FINISHED, UNCUT
	25229	SILICONE	ENCAP SPRING
	25270	MILL-RIGHT V	ENCAP SPRING
	25284	FDA SILICONE	ENCAP SPRING, FDA
	25285	FDA SILICONE	ENCAP SPRING, FDA - SOLID
	25305	MILL-RIGHT V	NO SPRING
25	25074	PTFE	302 STAINLESS STEEL SPRING SOLID
26	24615	MILL-RIGHT N	LOW TEMP. MILL-RIGHT N
	24617	MILL-RIGHT V	SPLIT, NO SPRING
	24623	MILL-RIGHT V	SOLID, NO FABRIC
	24624	MILL-RIGHT N	SPLIT, NO FABRIC
	24646	MILL-RIGHT V	SPLIT, NO FABRIC
	24653	MILL-RIGHT N	NO FABRIC IN HEEL
	24677	MILL-RIGHT ES	SOLID, NO FABRIC
26E	24640	MILL-RIGHT N	EXTERNAL
26HP	24680	MILL-RIGHT N	HIGH PRESSURE
50	21020	MILL-RIGHT N	GARTER SPRING
51	21021	MILL-RIGHT N	NO SPRING
	21022	MILL-RIGHT N	CARBON STEEL CASE W/ METAL BUTTONS
	21486	MILL-RIGHT N	BRASS CASE W/ METAL BUTTONS
	21619	MILL-RIGHT N	BRASS CASE, NO BUTTONS
53	21092	MILL-RIGHT N	ZINC PLATED CASE
	21094	MILL-RIGHT ES	304 SS CASE
	21097	MILL-RIGHT	BLACK, 316 SS CASE
	21100	SILICONE	316 SS CASE
	21101	FDA SILICONE	FDA SILICONE, 304 SS CASE
	21366	MILL-RIGHT N	LOW TEMP NITRILE
	21446	SILICONE	316 SS CASE
	21657	MILL-RIGHT N	O.D. SEALANT
	21692	MILL-RIGHT V	O.D. SEALANT
	21699	MILL-RIGHT V	STD
	21706	MILL-RIGHT N	DRAW HOLES
	21733	MILL-RIGHT V	NO SPRING
	21836	MILL-RIGHT N	LOW TEMP
	21882	MILL-RIGHT V	ZINC PLATED CASE

Model	Prefix	Seal Material	DESCRIPTION
53F1	22992	MILL-RIGHT N	ZINC PLATED CASE
	22998	SILICONE	CRS CASE
53T2	22899	FDA SILICONE	304 SS CASE
	23051	SILICONE	CRS CASE
57	26059	SILICONE (SIL)	
	26061	SILICONE (SIL)	MODIFIED DUST LIP
58	21008	CERAMIC	
	21009		STYLE 98
59	24711	MILL-RIGHT N	ZINC PLATED CASE
	24737	MILL-RIGHT ES	NO SPRING
	24744	MILL-RIGHT N	5/16" METAL BUTTONS
	24769	MILL-RIGHT ES	.156" METAL BUTTONS
	24772	MILL-RIGHT ES	.197" (5mm) METAL BUTTONS
P/S® I	24056	FDA GYLON	REVERSE LIP
	24060	GYLON	GYLON LIP , FLUORO GSKT
	24062	GYLON	DBL TANDEM , GYLON LIP, FLUORO GSKT
	24063	GYLON	DBL OPPOSED , GYLON LIP, FLUORO GSKT
	24064	GYLON	REVERSE LIP
	24076	FDA GYLON	DBL OPPOSED, FDA GYLON LIP, FLUORO GSKT
	24125	FDA GYLON	FDA GYLON LIP, FLUORO GSKT
	24128	FDA GYLON	DBL TANDEM, FDA GYLON LIP, FLUORO GSKT
61	24059	FDA GYLON	DBL TANDEM, FDA WHITE GYLON LIP, FDA WHITE GYLON GSKT
	24061	FDA GYLON	FDA WHITE GYLON LIP, FLUORO GSKT
	24070	GYLON	REDUCED LOAD, BLACK GYLON LIP, FLUORO GSKT
	24072	FDA GYLON	DBL OPPOSED, FDA WHITE GYLON LIP, FDA FLUORO GSKT
	24073	FDA GYLON	FDA WHITE GYLON LIP ONLY
	24130	FDA GYLON	REVERSED LIP, FDA WHITE GYLON LIP, FDA FLUORO GSKT
62	21155	PTFE	WHITE PTFE , CRS CASE
	21653	PTFE	WHITE PTFE, STAINLESS STEEL SPRING, 316 SS CASE
	21777	PTFE	STAINLESS STEEL SPRING
	21867	PTFE	NO SPRING, 316 SS CASE
	21954	PTFE	NO SPRING, CRS CASE

OBSOLETE

APPENDIX C

OBSOLETE PRODUCT IDENTIFICATION BY MODEL

Model	Prefix	Seal Material	DESCRIPTION
63	21158	MILL-RIGHT N	STD
	21168	SILICONE	STD
	21172	FDA SILICONE	FDA APPROVED SILICONE, CRS CASE
	21175	FDA SILICONE	FDA APPROVED SILICONE, 316 SS CASE
	21186	SILICONE	BRASS CASE
	21290	MILL-RIGHT ES	STD
	21295	MILL-RIGHT ES	316 SS CASE
	21296	MILL-RIGHT ES	ZINC PLATED CASE
	21474	SILICONE	NO SPRING
	21480	SILICONE	304 SS CASE
	21688	MILL-RIGHT N	DRAW HOLES
	21695	MILL-RIGHT V	STD
	21707	MILL-RIGHT N	DRAW HOLES, ZINC PLATED CASE
	21760	MILL-RIGHT N	DRAW HOLES, O.D. SEALANT
	21933	SILICONE	O.D. SEALANT
63F1	23078	MILL-RIGHT N	FELT
	23670	MILL-RIGHT N	ZINC PLATED CASE
63G1	23500	MILL-RIGHT N	GYLON EXCLUDER LIP
	23501	MILL-RIGHT ES	GYLON EXCLUDER LIP
	23502	MILL-RIGHT V	GYLON EXCLUDER LIP
	23503	MILL-RIGHT V	GYLON EXCLUDER LIP
63R	23169	MILL-RIGHT V	NO SPRING
63R1	23052	MILL-RIGHT ES	DUAL OPPOSED LIP - SINGLE SPRING
	23547	MILL-RIGHT N	DUAL OPPOSED LIP - SINGLE SPRING
	23605	MILL-RIGHT N	304 SS CASE
	23711	MILL-RIGHT V	DUAL OPPOSED LIP - SINGLE SPRING
63R2	23046	MILL-RIGHT N	ZINC PLATED CASE
	23548	MILL-RIGHT N	DUAL OPPOSED LIP - DUAL SPRING
	23627	MILL-RIGHT V	DUAL OPPOSED LIP - DUAL SPRING
	23631	MILL-RIGHT V	304 SS CASE
	23689	MILL-RIGHT N	304 SS CASE
	23769	MILL-RIGHT ES	DUAL OPPOSED LIP - DUAL SPRING
63T2	23550	MILL-RIGHT N	DUAL TANDEM LIP - DUAL SPRING
	23551	MILL-RIGHT ES	DUAL TANDEM LIP - DUAL SPRING
	23552	MILL-RIGHT V	DUAL TANDEM LIP - DUAL SPRING
	23713	FDA SILICONE	FDA SILICONE, 304 SS CASE
	23748	MILL-RIGHT V	304 SS CASE
63TB	23549	MILL-RIGHT N	DUAL TANDEM LIP - SINGLE SPRING
	23690	MILL-RIGHT N	304 SS CASE

Model	Prefix	Seal Material	DESCRIPTION
64	21223	MILL-RIGHT N	5/16" METAL BUTTONS
	21246	MILL-RIGHT N	STAINLESS STEEL SPRING
	21256	MILL-RIGHT N	NO SPRINGS
	21261	MILL-RIGHT N	STAINLESS STEEL GARTER SPRING, ZINC PLATED CASE
	21385	SILICONE	NO SPRING
	21398	MILL-RIGHT V	ZINC PLATED FILLER RING
	21859	MILL-RIGHT V	316 SS CASE
66	21519	MILL-RIGHT V	STAINLESS STEEL SPRING, 304 SS CASE
	21913	MILL-RIGHT N	STAINLESS STEEL SPRING , BRASS CASE
67	21632	MILL-RIGHT N	STAINLESS STEEL SPRING, ZINC PLATED
	21664	MILL-RIGHT N	O.D. SEALANT
	21694	MILL-RIGHT N	NO SPRING
	21763	SILICONE	STAINLESS STEEL SPRING, 304 SS CASE
	21800	MILL-RIGHT N	STAINLESS STEEL SPRING, BRASS CASE
	21801	MILL-RIGHT N	NO SPRING, 304 SS CASE
	21818	MILL-RIGHT ES	
	21819	MILL-RIGHT ES	STAINLESS STEEL SPRING, 304 SS CASE
	21827	MILL-RIGHT ES	ALUMINUM CASE
	21944	MILL-RIGHT N	304 SS CASE
67R1	23048	MILL-RIGHT N	
67T2	23621	MILL-RIGHT N	
68	21910	MILL-RIGHT N	STAINLESS STEEL SPRING, ZINC PLATED CASE
68R2	23724	MILL-RIGHT N	STAINLESS STEEL SPRING
	23727	MILL-RIGHT N	
71	26001	NITRILE	BONDED
76	26193	NITRILE	BONDED
87	26078	MILL-RIGHT ES	NO BUTTONS, .093" THK METAL INSERT
88	26079	MILL-RIGHT N	STAINLESS STEEL SPRING
	26185	MILL-RIGHT ES	NO BUTTONS
88NS	26589	MILL-RIGHT V	NO SPRING
91	27023	NITRILE	BONDED
92	27063	NITRILE	BONDED
94	27223	NITRILE	BONDED
	27685	FLUOROELASTOMER	
111	21011	MILL-RIGHT N	EXTERNAL
113	21012	MILL-RIGHT N	EXTERNAL
	21503	MILL-RIGHT N	
	21927	MILL-RIGHT N	
123	21016	MILL-RIGHT N	EXTERNAL
	21814	MILL-RIGHT ES	

OBSOLETE

APPENDIX C

OBSOLETE PRODUCT IDENTIFICATION BY MODEL

Model	Prefix	Seal Material	DESCRIPTION
145A	21758	NITRILE	STD
	21761	FLUOROELASTOMER	STD
145L	21738	FLUOROELASTOMER	STD
	21748	NITRILE	STD
145S	21749	NITRILE	STD
151	25600	NITRILE	SOLID GENERAL PURPOSE COMPOSITE SEAL
	25601	HYDROGENATED NITRILE	SOLID GENERAL PURPOSE COMPOSITE SEAL
	25602	FLUOROELASTOMER	SOLID GENERAL PURPOSE COMPOSITE SEAL
	25810	NITRILE	SPLIT GENERAL PURPOSE COMPOSITE SEAL
	25603	HYDROGENATED NITRILE	SPLIT GENERAL PURPOSE COMPOSITE SEAL
	25410	FLUOROELASTOMER	SPLIT GENERAL PURPOSE COMPOSITE SEAL
154	25812	NITRILE	SOLID GENERAL PURPOSE COMPOSITE SEAL
	25829	HYDROGENATED NITRILE	SOLID GENERAL PURPOSE COMPOSITE SEAL
	25814	FLUOROELASTOMER	SOLID GENERAL PURPOSE COMPOSITE SEAL
	25813	NITRILE	SPLIT GENERAL PURPOSE COMPOSITE SEAL
	25827	HYDROGENATED NITRILE	SPLIT GENERAL PURPOSE COMPOSITE SEAL
	25828	FLUOROELASTOMER	SPLIT GENERAL PURPOSE COMPOSITE SEAL
154M	25842	NITRILE	SOLID GENERAL PURPOSE COMPOSITE SEAL
	25843	HYDROGENATED NITRILE	SOLID GENERAL PURPOSE COMPOSITE SEAL
	25844	FLUOROELASTOMER	SOLID GENERAL PURPOSE COMPOSITE SEAL
154R1	25856	NITRILE	SOLID GENERAL PURPOSE COMPOSITE SEAL W/DUST LIP
	25861	HYDROGENATED NITRILE	SOLID GENERAL PURPOSE COMPOSITE SEAL W/DUST LIP
	25866	FLUOROELASTOMER	SOLID GENERAL PURPOSE COMPOSITE SEAL W/DUST LIP
	25872	NITRILE	SOLID GENERAL PURPOSE COMPOSITE SEAL W/DUST LIP
	25876	HYDROGENATED NITRILE	SOLID GENERAL PURPOSE COMPOSITE SEAL W/DUST LIP
	25881	FLUOROELASTOMER	SOLID GENERAL PURPOSE COMPOSITE SEAL W/DUST LIP

OBSOLETE

APPENDIX D

CHEMICAL COMPATIBILITY CHART

Compound Code	MILL-RIGHT® N NBR			MILL-RIGHT® ES & BLACK HNBR			MILL-RIGHT® V FKM			Silicone VMQ			GYLON® PTFE		
	Rating	°F	°C	Rating	°F	°C	Rating	°F	°C	Rating	°F	°C	Rating	°F	°C
Acetamide (Acryimide)	1	70	21	1	70	21	2	140	60	3	70	21	1	300	149
Acetone	4	70	21	4	70	21	4	70	21	3	70	21	1	200	93
Acetyl Chloride	4	70	21	4	70	21	2	70	21	3	70	21	1	200	93
Acetylene Gas	1	200	93	1	ND	ND	1	200	93	2	70	21	1	200	93
Aluminum Chloride	1	160	71	1	70	21	1	212	100	2	70	21	1	boiling	boiling
Aluminum Phosphate	1	70	21	1	70	21	1	70	21	1	70	21	1	70	21
Aluminum Sulphate	1	160	71	1	ND	ND	1	140	60	1	70	21	1	200	93
Ammonium Chloride	2	200	93	1	70	21	1	212	100	3	70	21	1	250	121
Ammonium Hydroxide	4	140	60	4	ND	ND	2	70	21	1	70	21	1	300	149
Ammonium Nitrate	1	200	93	1	70	21	1	176	80	3	70	21	1	200	93
Ammonium Nitrite	1	70	21	1	70	21	1	70	21	2	70	21	1	70	21
Ammonium Phosphate	1	200	93	1	ND	ND	1	176	80	1	70	21	1	70	21
Ammonium Sulfate	1	200	93	1	ND	ND	1	176	80	1	70	21	1	200	93
Amyl Borate	2	100	38	1	70	21	1	70	21	4	70	21	1	70	21
Amyl Chloronapthalene	4	80	27	4	70	21	1	140	60	4	70	21	1	70	21
Amyl Naphthalene	4	70	21	4	70	21	1	70	21	4	70	21	1	70	21
Arsenic Acid	1	140	60	1	70	21	1	140	60	1	70	21	1	200	93
Asphalt Emulsion	2	70	21	ND	ND	ND	1	400	204	4	70	21	1	180	82
Asphalt Topping	2	150	66	2	ND	ND	1	212	100	4	70	21	1	180	82
ATF-TYPE A	1	70	21	1	70	21	1	70	21	1	70	21	1	450	232
Automotive Brake Fluid	3	70	21	ND	ND	ND	4	70	21	1	70	21	1	70	21
Automotive Gasoline	1	250	121	ND	ND	ND	1	70	21	4	70	21	ND	ND	ND
Benzine (Gasoline)	1	250	121	1	ND	ND	1	100	38	4	70	21	1	300	149
Benzoic Acid	4	70	21	3	ND	ND	1	176	80	4	70	21	1	300	149
Benzoyl Chloride	4	70	21	4	ND	ND	4	70	21	4	70	21	1	70	21
Benzyl Alcohol	4	70	21	4	ND	ND	1	140	60	2	ND	ND	1	400	204
Benzyl Benzoate	4	70	21	4	ND	ND	1	70	21	1	ND	ND	1	70	21
Benzyl Chloride	4	70	21	4	ND	ND	1	200	93	4	70	21	1	387	197
Biphenyl	4	70	21	4	70	21	1	300	149	4	70	21	1	300	149
Black Liquor	1	140	60	ND	ND	ND	1	212	100	1	70	21	1	70	21
Black Liquor Waste	1	70	21	ND	ND	ND	1	70	21	ND	ND	ND	1	70	21
Black Sulfate Liquor	2	200	93	ND	ND	ND	1	176	80	2	70	21	1	70	21
Blast Furnace Gas	4	70	21	4	70	21	1	70	21	1	250	121	1	70	21
Boric Acid	1	140	60	1	70	21	1	176	80	1	70	21	1	300	149
Bromine Anhydrous Gas	4	70	21	4	ND	ND	1	70	21	3	70	21	1	300	149
Bromobenzene	4	70	21	4	70	21	1	70	21	4	70	21	1	122	50
Butadiene (Monomer)	4	140	60	4	ND	ND	2	250	121	4	70	21	1	300	149
Butane	1	200	93	1	70	21	1	176	80	4	70	21	1	300	149
Butyl Acetate	4	70	21	4	70	21	4	70	21	4	70	21	1	300	149
N-Butyl Benzoate	4	70	21	4	70	21	1	70	21	1	ND	ND	1	122	50
Butyl Carbitol	4	70	21	4	70	21	3	70	21	4	70	21	1	70	21
Butyl Oleate	4	70	21	4	70	21	3	70	21	2	70	21	1	70	21
Butyl Stearate	2	104	40	2	70	21	1	104	40	ND	ND	ND	1	70	21
Butylene	1	250	121	4	70	21	1	140	60	4	70	21	1	200	93
Calcium Bisulfate	1	70	21	ND	ND	ND	1	70	21	3	70	21	1	70	21
Calcium Bisulfide	1	70	21	ND	ND	ND	1	140	60	3	70	21	1	70	21

CHEMICAL COMPATIBILITY CHART

Compound Code	MILL-RIGHT® N NBR			MILL-RIGHT® ES & BLACK HNBR			MILL-RIGHT® V FKM			Silicone VMQ			GYLON® PTFE		
	Rating	°F	°C	Rating	°F	°C	Rating	°F	°C	Rating	°F	°C	Rating	°F	°C
Calcium Bisulfite	1	104	40	1	70	21	1	176	80	1	70	21	1	200	93
Calcium Hydroxide	1	140	60	1	70	21	1	212	100	1	70	21	1	122	50
Calcium Hypochlorite	3	70	21	2	70	21	1	70	21	2	70	21	1	300	149
Calcium Nitrate	1	176	80	1	70	21	1	212	100	2	70	21	1	200	93
Calcium Sulfide	1	140	60	1	70	21	1	212	100	2	70	21	1	300	149
Carbamate	3	70	21	3	ND	ND	1	70	21	1	ND	ND	1	70	21
Carbolic Acid	4	70	21	4	70	21	1	140	60	4	70	21	1	70	21
Carbon Dioxide	1	160	71	1	70	21	2	212	100	2	70	21	1	300	149
Carbon Monoxide	1	140	60	1	70	21	1	212	100	1	140	60	1	300	149
Carbon Tetrachloride	4	70	21	2	70	21	1	75	24	4	70	21	1	200	93
Chlorine Dioxide	4	70	21	4	70	21	1	70	21	3	70	21	1	70	21
Chlorobenzene	4	70	21	4	70	21	1	200	93	4	70	21	1	300	149
Chlorotoluene	4	70	21	4	70	21	1	200	93	4	70	21	1	387	197
Chrome Plating Solutions	4	70	21	4	70	21	1	70	21	2	70	21	1	70	21
Chromic Acid	4	70	21	4	70	21	1	70	21	2	70	21	2	248	120
Cobalt Chloride	1	70	21	1	70	21	1	70	21	2	70	21	ND	ND	ND
Copper Chloride	1	176	80	1	70	21	1	212	100	1	70	21	1	150	66
Copper Cyanide	1	boiling	boiling	1	70	21	1	boiling	boiling	1	70	21	1	300	149
Copper Plating Solution	1	140	60	ND	ND	ND	1	140	60	4	70	21	1	70	21
Copper Sulfate	1	176	80	1	70	21	1	140	60	1	70	21	1	200	93
Creosote	2	70	21	2	ND	ND	1	212	100	4	70	21	1	70	21
Cresylic Acid	4	70	21	1	70	21	1	158	70	4	70	21	1	200	93
Cumene	4	70	21	4	70	21	1	200	93	4	70	21	3	122	50
Cyclohexane	1	250	121	1	70	21	1	200	93	4	70	21	1	300	149
Cyclohexanol	1	70	21	1	70	21	1	104	40	4	70	21	1	200	93
Degreasing Fluid	4	70	21	ND	ND	ND	1	70	21	ND	ND	ND	1	70	21
Denatured Alcohol	1	70	21	1	70	21	1	70	21	1	212	100	1	70	21
Detergent Solutions	1	200	93	1	70	21	1	212	100	1	ND	ND	1	300	149
Developing Fluids	1	70	21	1	70	21	1	70	21	1	70	21	1	300	149
Dibromoethyl Benzene	4	70	21	4	70	21	1	70	21	4	70	21	ND	ND	ND
0-Dichlorobenzene	4	70	21	4	70	21	1	158	70	4	70	21	1	125	52
Diesel Oil	1	250	121	1	70	21	1	200	93	4	70	21	1	300	149
Diethylamine	3	140	60	3	70	21	4	140	60	2	70	21	1	300	149
Diethylbenzene	4	70	21	4	70	21	1	200	93	4	70	21	1	122	50
Diethylene Glycol	1	200	93	1	ND	ND	1	140	60	2	70	21	1	125	52
Disooctyl Sebacate	3	70	21	4	70	21	2	70	21	3	70	21	ND	ND	ND
Disopropyl Benzene	4	70	21	4	70	21	1	200	93	4	70	21	1	70	21
Dimethylether	1	70	21	1	70	21	1	70	21	1	70	21	1	70	21
Dimethylphthalate	4	70	21	4	70	21	1	70	21	2	70	21	1	392	200
Dipentene	2	200	93	2	70	21	1	70	21	4	70	21	1	70	21
Diphenyl	4	70	21	4	70	21	1	300	149	4	70	21	1	300	149
Diphenyl Oxides	4	70	21	4	70	21	1	140	60	3	70	21	1	70	21
Dry Cleaning Fluids	3	70	21	3	70	21	1	70	21	4	70	21	1	70	21
Ethane	1	140	60	1	70	21	1	140	60	4	70	21	1	70	21
Ethanol	1	140	60	1	70	21	4	104	40	1	70	21	1	392	200
Ethyl Alcohol	1	140	60	1	70	21	1	70	21	2	70	21	1	392	200

APPENDIX D

CHEMICAL COMPATIBILITY CHART

Compound Code	MILL-RIGHT® N NBR			MILL-RIGHT® ES & BLACK HNBR			MILL-RIGHT® V FKM			Silicone VMQ			GYLON® PTFE		
	Rating	°F	°C	Rating	°F	°C	Rating	°F	°C	Rating	°F	°C	Rating	°F	°C
Ethyl Chloride	1	140	60	1	70	21	1	140	60	4	70	21	1	125	52
Ethyl Formate	4	70	21	4	70	21	1	70	21	ND	ND	ND	1	70	21
Ethyl Oxalate	4	70	21	4	70	21	1	70	21	4	70	21	1	70	21
Ethyl Silicate	1	70	21	1	70	21	1	70	21	ND	ND	ND	1	70	21
Ethylene	1	200	93	1	70	21	1	70	21	4	70	21	1	70	21
Ethylene Chlorohydrin	4	70	21	4	70	21	1	70	21	3	70	21	1	300	149
Ethylene Diamine	1	80	27	1	70	21	4	70	21	1	70	21	1	242	117
Ethylene Dichloride	4	70	21	4	70	21	1	200	93	4	70	21	1	300	149
Ethylene Glycol	1	212	100	1	70	21	1	250	121	1	70	21	1	300	149
Ethylene Trichloride	4	70	21	4	70	21	1	70	21	4	70	21	1	70	21
Ferric Chloride	1	150	66	1	70	21	1	176	80	2	70	21	1	300	149
Ferric Nitrate	1	140	60	1	70	21	1	212	100	3	70	21	1	300	149
Ferric Sulfate	1	140	60	1	70	21	1	176	80	2	70	21	1	300	149
Formic Acid	4	70	21	2	140	60	3	140	60	3	70	21	1	boiling	boiling
Freon 12	1	250	121	1	70	21	2	75	24	4	70	21	1	70	21
Freon 22	4	70	21	4	70	21	4	70	21	4	70	21	1	300	149
Fuel Oil	1	250	121	1	70	21	1	200	93	4	70	21	1	300	149
Fumaric Acid	1	70	21	1	70	21	1	70	21	2	70	21	1	70	21
Fyrquel	4	70	21	4	70	21	1	212	100	1	70	21	1	70	21
Gear Oil Super	1	212	100	1	70	21	1	350	177	1	70	21	ND	ND	ND
Grease	1	100	38	1	70	21	1	140	60	4	70	21	1	70	21
Hydraulic Oil	1	250	121	1	70	21	1	70	21	3	70	21	1	70	21
Hydrobromic Acid	4	140	60	4	70	21	1	140	60	4	70	21	1	212	100
Hydrocyanic Acid	2	140	60	2	70	21	1	140	60	3	70	21	1	300	149
Hydrofluosilicic Acid	1	70	21	1	70	21	1	70	21	4	70	21	1	200	93
Hydrogen Gas	1	200	93	1	70	21	1	176	80	3	140	60	1	300	149
Hypoid Lubes	2	70	21	2	70	21	1	300	149	4	70	21	ND	ND	ND
Isobutyl Alcohol	2	80	27	2	70	21	1	75	24	1	70	21	1	200	93
Isooctane	1	250	121	1	70	21	1	70	21	4	70	21	1	300	149
Isopropyl Alcohol	1	70	21	2	70	21	1	170	77	1	70	21	1	300	149
Kerosene	1	250	121	1	70	21	1	158	70	4	70	21	1	300	149
Ketones	4	70	21	4	70	21	4	70	21	4	70	21	1	300	149
Lacquers	4	70	21	4	70	21	4	70	21	4	70	21	1	70	21
Lacquer Solvents	4	70	21	4	70	21	4	70	21	4	70	21	1	70	21
Lead Nitrate	1	120	49	1	70	21	1	212	100	2	70	21	1	125	52
Lead Sulfamate	2	140	60	2	70	21	1	140	60	2	70	21	1	125	52
Linseed Oil	1	200	93	1	70	21	1	250	121	1	70	21	1	300	149
Liquefied Petroleum-Gas	1	250	121	1	70	21	1	176	80	4	70	21	1	200	93
Lubricating Oils	1	70	21	1	70	21	1	158	70	4	70	21	1	300	149
Magnesium Chloride	1	176	80	1	70	21	1	176	80	1	70	21	1	300	149
Magnesium Hydroxide	1	140	60	2	70	21	1	212	100	1	70	21	1	300	149
Magnesium Sulfate	1	176	80	1	70	21	1	boiling	boiling	1	70	21	1	300	149
Maleic Acid	4	176	80	4	70	21	1	140	60	4	70	21	1	300	149
Malic Acid	1	70	21	1	70	21	1	70	21	2	70	21	1	300	149
Methane	1	250	121	1	70	21	2	176	80	4	70	21	1	300	149
Methanol	1	70	21	1	70	21	4	75	24	1	70	21	1	300	149

CHEMICAL COMPATIBILITY CHART

Compound Code	MILL-RIGHT® N NBR			MILL-RIGHT® ES & BLACK HNBR			MILL-RIGHT® V FKM			Silicone VMQ			GYLON® PTFE		
	Rating	°F	°C	Rating	°F	°C	Rating	°F	°C	Rating	°F	°C	Rating	°F	°C
Methyl Alcohol	1	70	21	1	70	21	4	75	24	1	70	21	1	300	149
Methyl Bromide	2	70	21	2	70	21	1	160	71	1	ND	ND	1	300	149
Methyl Ether	1	70	21	1	70	21	1	70	21	1	70	21	1	70	21
Methyl Oleate	4	70	21	4	70	21	1	70	21	ND	ND	ND	1	70	21
Mineral Oil	1	250	121	1	70	21	1	70	21	2	70	21	1	356	180
Naphtha	1	250	121	2	70	21	1	158	70	4	70	21	1	300	149
Naphthalene	4	70	21	4	70	21	1	176	80	4	70	21	1	424	218
Naphthalenic	2	70	21	2	70	21	1	160	71	4	70	21	1	70	21
Natural Gas	1	250	121	1	70	21	1	176	80	4	70	21	1	70	21
Nickel Chloride	1	176	80	1	70	21	1	212	100	1	70	21	1	300	149
Nitric Acid (Dilute)	4	70	21	4	70	21	1	158	70	2	70	21	1	248	120
Octachlortoluene	4	70	21	4	70	21	1	70	21	4	70	21	1	70	21
Octadecane	1	70	21	4	70	21	1	70	21	4	70	21	1	70	21
N-Octane	2	70	21	2	70	21	1	70	21	4	70	21	1	300	149
Octyl Alcohol	2	100	38	2	70	21	2	70	21	2	70	21	1	70	21
Oleum Spirits	2	70	21	2	70	21	1	160	71	4	70	21	1	70	21
Oxalic Acid	2	140	60	2	70	21	1	140	60	2	70	21	1	200	93
Oxygen-Cold	2	100	38	4	70	21	1	70	21	1	70	21	1	70	21
Oxygen-Hot	4	250	121	4	70	21	2	400	204	2	70	21	1	400	204
Ozone	4	70	21	1	70	21	1	70	21	1	400	204	1	125	52
Paint Thinner, Duco	4	70	21	4	70	21	2	200	93	4	70	21	1	70	21
Palmitic Acid	1	160	71	1	70	21	1	70	21	4	70	21	1	300	149
Perchloric Acid	4	70	21	4	70	21	3	200	93	4	ND	ND	1	200	93
Perchloroethylene	2	70	21	2	70	21	1	212	100	4	70	21	1	250	121
Petroleum	1	250	121	1	70	21	1	250	121	4	70	21	1	250	121
Phenol	4	70	21	4	70	21	1	140	60	4	ND	ND	1	300	149
Phenyl Benzene	4	70	21	4	70	21	1	300	149	4	70	21	1	300	149
Phenyl Ethyl Ether	4	70	21	4	70	21	4	70	21	4	70	21	1	70	21
Phenyl Hydrazine	4	70	21	4	70	21	1	70	21	1	ND	ND	1	70	21
Phorone	4	70	21	4	70	21	4	70	21	4	70	21	1	70	21
Phosphate Ester	4	70	21	4	70	21	4	70	21	1	70	21	1	70	21
Phosphorus Trichloride	4	70	21	4	70	21	1	70	21		ND	ND	1	300	149
Pickling Solution	4	70	21	4	70	21	2	70	21	4	70	21	1	70	21
Picric Acid (10%)	2	160	71	2	70	21	1	140	60	2	70	21	1	300	149
Pinene	2	70	21	2	70	21	1	158	70	4	70	21	1	boiling	boiling
Piperidine	4	70	21	4	70	21	4	70	21	4	70	21	1	boiling	boiling
Plating Solution - Chrome	4	70	21	4	70	21	1	140	60	4	70	21	1	300	149
Plating Solution - Others	1	70	21	1	70	21	1	70	21	4	70	21	1	70	21
Potassium Acetate	2	120	49	2	70	21	4	70	21	4	70	21	1	390	199
Potassium Chloride	1	176	80	1	70	21	1	212	100	1	70	21	1	70	21
Potassium Cupro-Cyanide	1	140	60	1	70	21	1	212	100	1	70	21	1	70	21
Potassium Cyanide	1	140	60	1	70	21	1	70	21	1	70	21	1	200	93
Potassium Dichromate	1	140	60	1	70	21	1	212	100	1	70	21	1	200	93
Potassium Hydroxide	2	150	66	2	ND	ND	2	70	21	3	70	21	1	300	149
Potassium Nitrate	1	140	60	1	70	21	1	212	100	1	70	21	1	300	149
Potassium Sulfate	1	160	71	1	70	21	1	212	100	1	70	21	1	300	149

APPENDIX D

CHEMICAL COMPATIBILITY CHART

Compound Code	MILL-RIGHT® N NBR			MILL-RIGHT® ES & BLACK HNBR			MILL-RIGHT® V FKM			Silicone VMQ			GYLON® PTFE		
	Rating	°F	°C	Rating	°F	°C	Rating	°F	°C	Rating	°F	°C	Rating	°F	°C
Producer Gas	1	250	121	1	70	21	1	70	21	2	70	21	1	70	21
Propane	1	250	121	1	70	21	1	176	80	4	70	21	1	300	149
Propyl Acetate	4	70	21	4	70	21	4	70	21	4	70	21	1	70	21
N-Propyl Acetate	4	70	21	4	70	21	4	70	21	4	70	21	1	70	21
Propyl Acetone	4	70	21	4	70	21	4	70	21	3	ND	ND	1	70	21
Propyl Alcohol	2	200	93	1	70	21	1	212	100	1	70	21	1	300	149
Propyl Nitrate	4	70	21	4	70	21	4	70	21	4	70	21	1	70	21
Propylene	4	70	21	4	70	21	1	70	21	4	70	21	1	70	21
Propylene Oxide	4	70	21	4	70	21	4	70	21	4	70	21	1	300	149
Pydraul, 10E	4	70	21	4	70	21	1	70	21	4	70	21	1	70	21
Pydraul, 29ELT, 30E, 50E, 65E, 90E	4	70	21	4	70	21	1	158	70	1	70	21	1	70	21
Pydraul, 115E	4	70	21	4	70	21	1	70	21	4	70	21	2	400	204
Pyranol, Transformer Oil	1	70	21	1	70	21	1	70	21	4	70	21	ND	ND	ND
Rapeseed Oil	2	250	121	2	70	21	1	70	21	4	70	21	1	70	21
RJ-1 (MIL-F-25558)	1	70	21	1	70	21	1	70	21	4	70	21	ND	ND	ND
RP-1 (MIL-R-25576)	1	70	21	1	70	21	1	70	21	4	70	21	ND	ND	ND
SAE-10	1	250	121	1	70	21	1	70	21	4	70	21	1	70	21
SAE-30	1	70	21	1	70	21	1	70	21	1	ND	ND	ND	ND	ND
Sal Ammoniac	1	160	71	1	70	21	1	212	100	3	70	21	1	boiling	boiling
Salicylic Acid	2	70	21	2	70	21	1	70	21	1	ND	ND	1	300	149
Salt Water	1	140	60	1	70	21	1	176	80	1	70	21	1	250	121
Sea Water	1	140	60	1	70	21	1	212	100	1	70	21	1	250	121
Sewage	1	200	93	1	70	21	1	176	80	2	70	21	1	70	21
Silicate Esters	2	180	82	2	70	21	ND	400	204	4	70	21	1	70	21
Silicone Greases	1	140	60	1	70	21	1	140	60	3	70	21	1	300	149
Silicone Oils	1	140	60	1	70	21	1	400	204	4	70	21	1	300	149
Silver Nitrate	2	180	82	2	70	21	1	176	80	1	70	21	1	300	149
Soap Solutions	1	200	93	1	70	21	1	212	100	1	70	21	1	300	149
Soda Ash	1	160	71	1	70	21	1	212	100	1	70	21	1	300	149
Sodium Acetate	2	176	80	2	70	21	4	70	21	4	70	21	1	300	149
Sodium Bicarbonate	1	140	60	1	70	21	1	212	100	1	70	21	1	300	149
Sodium Bisulfite	2	212	100	1	70	21	1	212	100	1	70	21	1	200	93
Sodium Borate	1	70	21	1	70	21	1	176	80	1	70	21	1	300	149
Sodium Chloride	1	160	71	1	70	21	1	212	100	1	212	100	1	300	149
Sodium Cyanide	1	140	60	1	ND	ND	1	176	80	1	70	21	1	300	149
Sodium Hydroxide	2	70	21	2	70	21	2	70	21	1	70	21	1	300	149
Sodium Hypochlorite	4	130	54	2	70	21	1	158	70	2	70	21	1	300	149
Sodium Metaphosphate	1	140	60	1	70	21	1	140	60	1	70	21	1	300	149
Sodium Nitrate	2	176	80	2	ND	ND	1	212	100	4	70	21	1	300	149
Sodium Perborate	2	200	93	2	70	21	1	140	60	2	70	21	1	300	149
Sodium Peroxide	2	200	93	2	70	21	1	boiling	boiling	4	70	21	1	300	149
Sodium Phosphates	1	200	93	1	70	21	1	176	80	4	70	21	1	300	149
Sodium Silicate	1	140	60	1	70	21	1	212	100	1	70	21	1	300	149
Sodium Sulfates	1	140	60	1	ND	ND	1	176	80	1	70	21	1	300	149
Sodium Thiosulfates	2	200	93	2	ND	ND	1	212	100	1	70	21	1	300	149
Soybean Oil	1	250	121	1	70	21	1	250	121	1	70	21	1	200	93

CHEMICAL COMPATIBILITY CHART

Compound Code	MILL-RIGHT® N NBR			MILL-RIGHT® ES & BLACK HNBR			MILL-RIGHT® V FKM			Silicone VMQ			GYLON® PTFE		
	Rating	°F	°C	Rating	°F	°C	Rating	°F	°C	Rating	°F	°C	Rating	°F	°C
Stannic Chloride	1	140	60	1	70	21	1	140	60	2	70	21	1	300	149
Steam	4	212	100	4	212	100	1	212	100	4	225	107	1	450	232
Stearic Acid	1	70	21	2	70	21	1	140	60	2	70	21	1	300	149
Stoddards Solvent	1	250	121	1	70	21	1	158	70	4	70	21	1	300	149
Styrene Polymer	4	70	21	4	70	21	1	120	49	4	70	21	1	70	21
Sucrose Solution	1	140	60	2	70	21	1	140	60	1	70	21	1	200	93
Sulfur Chloride	4	70	21	4	70	21	1	140	60	3	70	21	1	300	149
Sulfur Hexafluroride	2	70	21	2	70	21	4	70	21	2	70	21	1	70	21
Sulfur Trioxide	4	70	21	4	70	21	1	140	60	2	70	21	1	300	149
Sulfuric Acid	4	70	21	4	70	21	1	158	70	4	70	21	1	400	204
Sulfur Acid (20% Oleum)	4	70	21	2	70	21	1	75	24	4	70	21	1	400	204
Sulfurous Acid	4	70	21	2	70	21	1	140	60	4	70	21	1	300	149
Tannic Acid	1	200	93	1	70	21	1	140	60	2	70	21	1	300	149
Terpineol	2	70	21	2	70	21	1	70	21	ND	ND	ND	1	70	21
Tertiary Butyl Alcohol	2	70	21	2	70	21	1	70	21	2	70	21	1	70	21
Tertiary Butyl Catechol	4	70	21	4	70	21	1	70	21	1	ND	ND	1	70	21
Tertiary Butyl Mercaptan	4	70	21	4	70	21	1	70	21	4	70	21	1	70	21
Tetrabromoethane	4	70	21	4	70	21	1	70	21	4	70	21	1	boiling	boiling
Tetrabromomethane	4	70	21	4	70	21	1	70	21	4	70	21	1	70	21
Tetrabutyl Titanate	2	70	21	2	70	21	1	70	21	ND	ND	ND	1	70	21
Tetrochloroethylene	4	70	21	4	70	21	1	212	100	4	70	21	1	250	121
Tetraethyl Lead	2	120	49	2	70	21	1	120	49	ND	ND	ND	1	300	149
Tetralin	4	70	21	4	70	21	1	70	21	4	70	21	1	70	21
Titanium Tetrachloride	4	70	21	2	70	21	1	ND	ND	4	70	21	1	300	149
Transformer Oil	1	150	66	1	70	21	1	300	149	2	70	21	1	300	149
Transmission Fluid Type A	1	70	21	1	70	21	1	212	100	2	70	21	1	70	21
Triaryl Phosphate	4	70	21	4	70	21	1	70	21	3	70	21	1	70	21
Tricresyl Phosphate	4	70	21	4	70	21	1	140	60	3	70	21	1	boiling	boiling
Turbine Oil	2	70	21	1	70	21	1	140	60	4	70	21	1	70	21
Turpentine	1	200	93	1	70	21	1	158	70	4	70	21	1	300	149
Varnish	2	70	21	2	70	21	1	70	21	4	70	21	1	70	21
Versilube F-50	1	70	21	1	70	21	1	350	177	3	70	21	1	70	21
Vinyl Chloride	4	70	21	4	70	21	1	70	21	1	ND	ND	1	300	149
Wagner 21B Brake Fluid	3	70	21	3	70	21	4	70	21	3	70	21	1	70	21
Water	1	180	82	1	70	21	2	275	135	2	180	82	1	boiling	boiling
White Oil	1	70	21	1	70	21	1	70	21	4	70	21	1	70	21
White Pine Tar	2	70	21	2	70	21	1	70	21	4	70	21	1	70	21
Xylene	4	70	21	4	70	21	1	140	60	4	70	21	1	300	149
Xylidines	4	70	21	ND	ND	ND	4	70	21	4	70	21	1	70	21
Zeolites	1	70	21	1	70	21	1	70	21	ND	ND	ND	ND	ND	ND
Zinc Acetate	2	176	80	2	70	21	4	176	80	4	70	21	1	70	21
Zinc Chloride	1	140	60	1	70	21	1	212	100	2	70	21	1	300	149
Zinc Sulfate	1	140	60	1	70	21	1	boiling	boiling	1	70	21	1	300	149

DAMAGE ANALYSIS ROOT CAUSE IDENTIFICATION

In the heavy industrial market, the damage of a single seal could result in product damage, lengthy equipment downtime, and additional maintenance costs.

When seal damage occurs, the user must quickly diagnose and implement a corrective action to minimize total cost of equipment downtime. To help maintenance and engineering personnel pinpoint the true source of damage, we have created a fish bone diagram which graphically organizes common symptoms with common root causes. The fish bone diagram is one of several fundamental quality control tools implemented extensively in problem solving. Developed by Kaoru Ishikawa in 1943, it is also called the Ishikawa diagram, cause and effect diagram, and root cause analysis tool.

The fish bone diagram is designed to help the user:

- Sort and segregate possible causes of problems in a logical manner
- Identify areas for data gathering
- Identify, explore, and graphically display, all of the possible causes related to a problem or condition to discover its root cause(s)
- Guide discussions and keep them focused

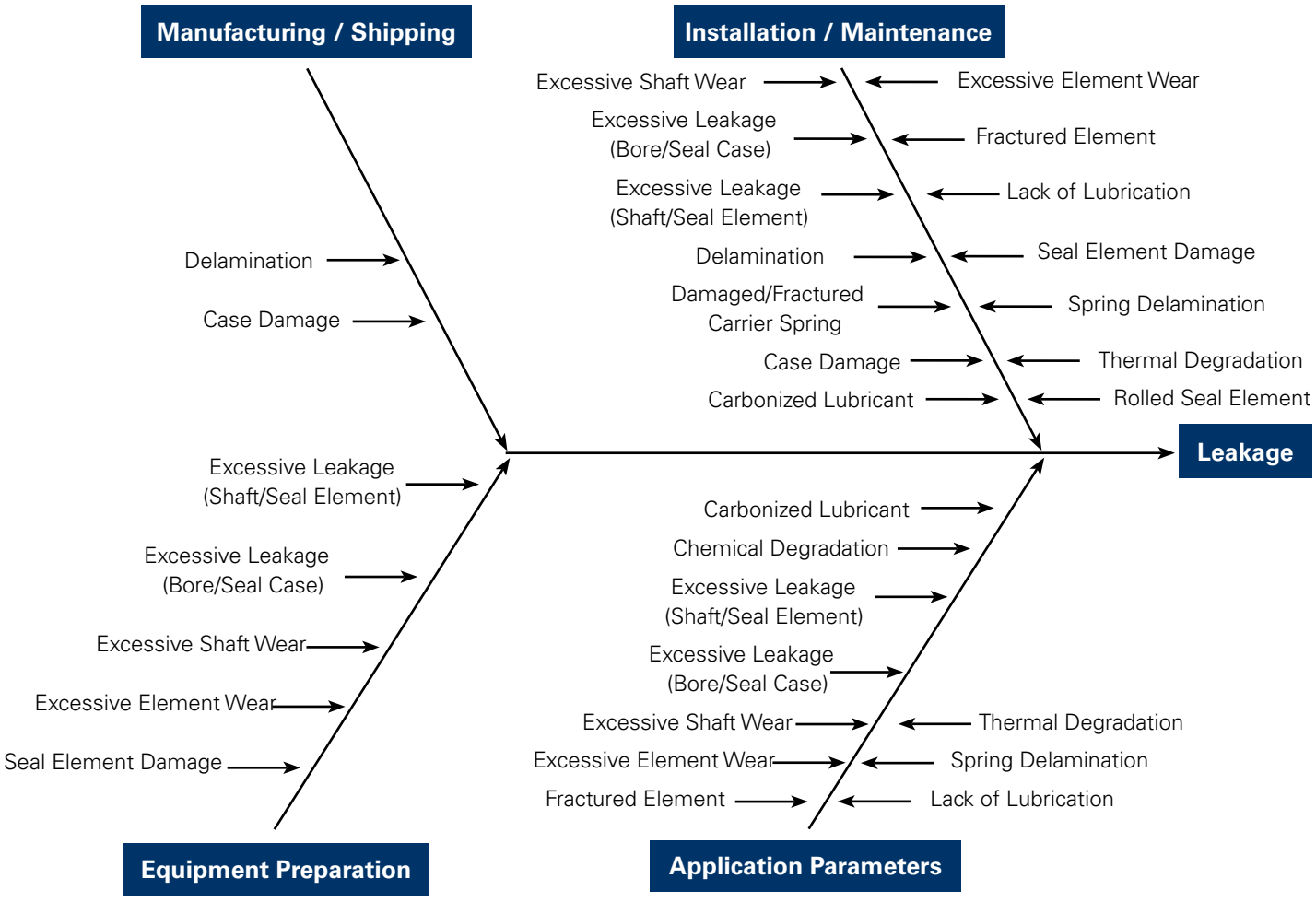

OIL SEAL DAMAGE ANALYSIS

REFERENCE IMAGES – DAMAGED SEALS

To help the user identify failure modes, the following images were compiled to serve as a reference.

CARBONIZED LUBRICANT

PROBLEM

Degraded lubricant deposits around the sealing interface are evident.

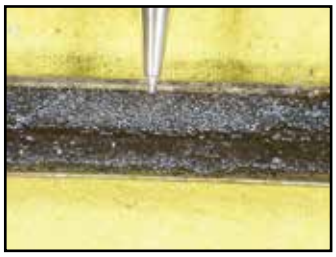

Possible Source	Possible Solution
Excessive lubricant temperature	Decrease the lubricant temperature or upgrade to a lubricant with higher temperature capabilities.

CASE DAMAGE

PROBLEM

The case of the seal is damaged.



Possible Source	Possible Solution
Installation damage	Modify installation technique to prevent damage to the seal.
Shipping damage	Contact your Garlock KLOZURE representative.

CHEMICAL DEGRADATION

PROBLEM

The seal element has abnormal swelling and/or distortion.

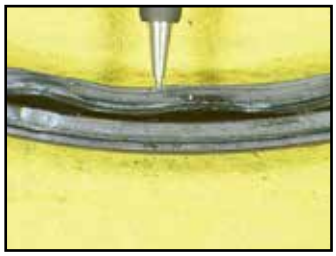

Possible Source	Possible Solution
Incompatibility between the seal element and the material being sealed (i.e., lubricant, coolant, etc)	Upgrade to a compatible seal element.

DELAMINATION

PROBLEM

The seal shows signs of delamination of the elastomer or bubbles within.

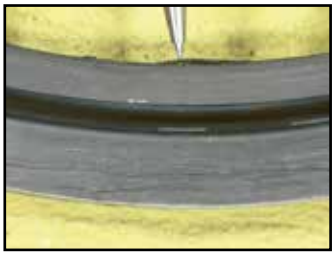

Possible Source	Possible Solution
Installation damage	Modify installation technique to prevent damage to the seal.
Shipping damage	Contact your Garlock KLOZURE representative.
Manufacturing error	Contact your Garlock KLOZURE representative.

DAMAGE/FRACTURED CARRIER SPRING

PROBLEM

The carrier spring is damaged and/or fractured.

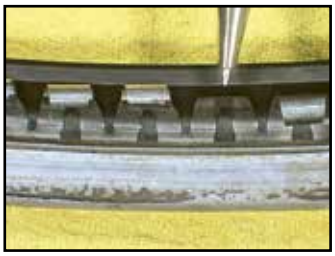

Possible Source	Possible Solution
Installation damage	Modify installation technique to prevent damage to the seal.
Excessive loading of the seal element	Do not allow the seal to carry the weight of the shaft.

EXCESSIVE LEAKAGE (BORE/SEAL CASE)

PROBLEM

Excessive leakage is occurring between the bore and the seal case.

Possible Source	Possible Solution
Improper seal/bore size	Switch to a properly sized seal.
Rough bore surface	Refinish bore surface to seal specifications.
Use of installation lubricant	Do not use installation lubricant (not recommended for the bore and seal case).
Cocked seal installation	Ensure the seal is installed squarely into the housing bore.

EXCESSIVE SEAL ELEMENT WEAR

PROBLEM

A wider than normal wear pattern on the surface of the seal element is present.

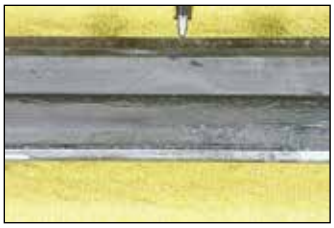

Possible Source	Possible Solution
High internal pressure	Clean drain ports and chamber vents or upgrade to a seal with higher pressure capabilities.
High misalignment/runout	Upgrade to a seal with higher misalignment/runout capabilities.
Rough shaft finish	Refinish shaft surface to seal specifications.
Lack of lubrication	Ensure the seal is properly lubricated.
Extended seal service	Upgrade to an extended service element material or update the maintenance schedule to accommodate new seal life requirements.
Oversized shaft	Switch to a properly sized seal.

FRACTURED SEAL ELEMENT

PROBLEM

The seal element is fractured.

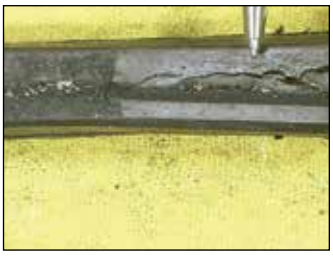

Possible Source	Possible Solution
Installation damage	Modify installation technique to prevent damage to the seal.
Excessive loading of the seal element	Do not allow the seal to carry the weight of the shaft.
Thermal degradation	Decrease the operating temperature or upgrade to a compatible seal element.
Lack of lubrication	Change or increase the amount of lubrication present at the sealing interface.

ROLLED SEAL ELEMENT

PROBLEM

The seal lip has been rolled over such that it doesn't properly engage shaft.



Possible Source	Possible Solution
Installation damage	Modify installation technique to prevent damage to the seal. (Installation tool may be necessary)

EXCESSIVE LEAKAGE (SHAFT/SEAL ELEMENT)

PROBLEM

Excessive leakage is occurring between the shaft and the seal lip.

Possible Source	Possible Solution
Rough shaft surface	Refinish shaft surface to seal specifications.
Excessive use of installation lubrication	Decrease the amount of installation lubricant being used.
Shaft machined lead (spiral grooves)	Refinish shaft surface to seal specifications.
Cocked seal installation	Ensure the seal is installed squarely into the housing bore.
Excessive shaft movement (TIR)	Move the seal closer to the bearings.

OIL SEAL DAMAGE ANALYSIS

LACK OF LUBRICATION

PROBLEM

The seal element has surface cracks or irregular wear patterns.

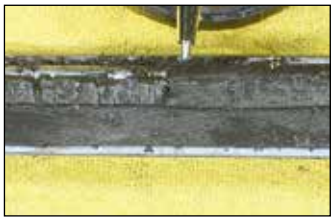

Possible Source	Possible Solution
Insufficient lubrication level	Increase the lubrication level.
Excessive internal pressure	Decrease the internal pressure.

SEAL ELEMENT DAMAGE

PROBLEM

The seal element has nicks, cuts or tears.

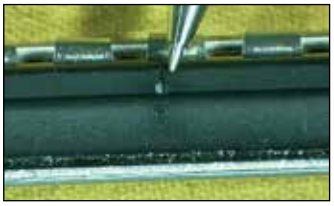

Possible Source	Possible Solution
Rough shaft finish	Refinish shaft surface to seal specifications.
Installation damage	Modify installation technique to prevent damage to the seal.

SPRING DELAMINATION

PROBLEM

The spring delaminated from the seal element.



Possible Source	Possible Solution
Excessive loading of the seal element	Upgrade to a seal with higher misalignment capabilities.
Excessive temperature	Upgrade to a seal material with higher temperature capabilities.

EXCESSIVE SHAFT WEAR

PROBLEM

The shaft has an excessive wear groove.



Possible Source	Possible Solution
Abrasive damage (installation)	Ensure the shaft and seal are clean prior to installing the seal.
Abrasive damage (operational)	Prevent abrasive materials from collecting at the sealing interface.
Soft shaft material	Ensure the shaft hardness meets the seal specifications.

THERMAL DEGRADATION

PROBLEM

The seal element is fractured (cracked).



Possible Source	Possible Solution
Excessive temperature	Decrease the operating temperature or upgrade to a seal material with higher temperature capabilities.

APPENDIX F

SURFACE SPEED CHART

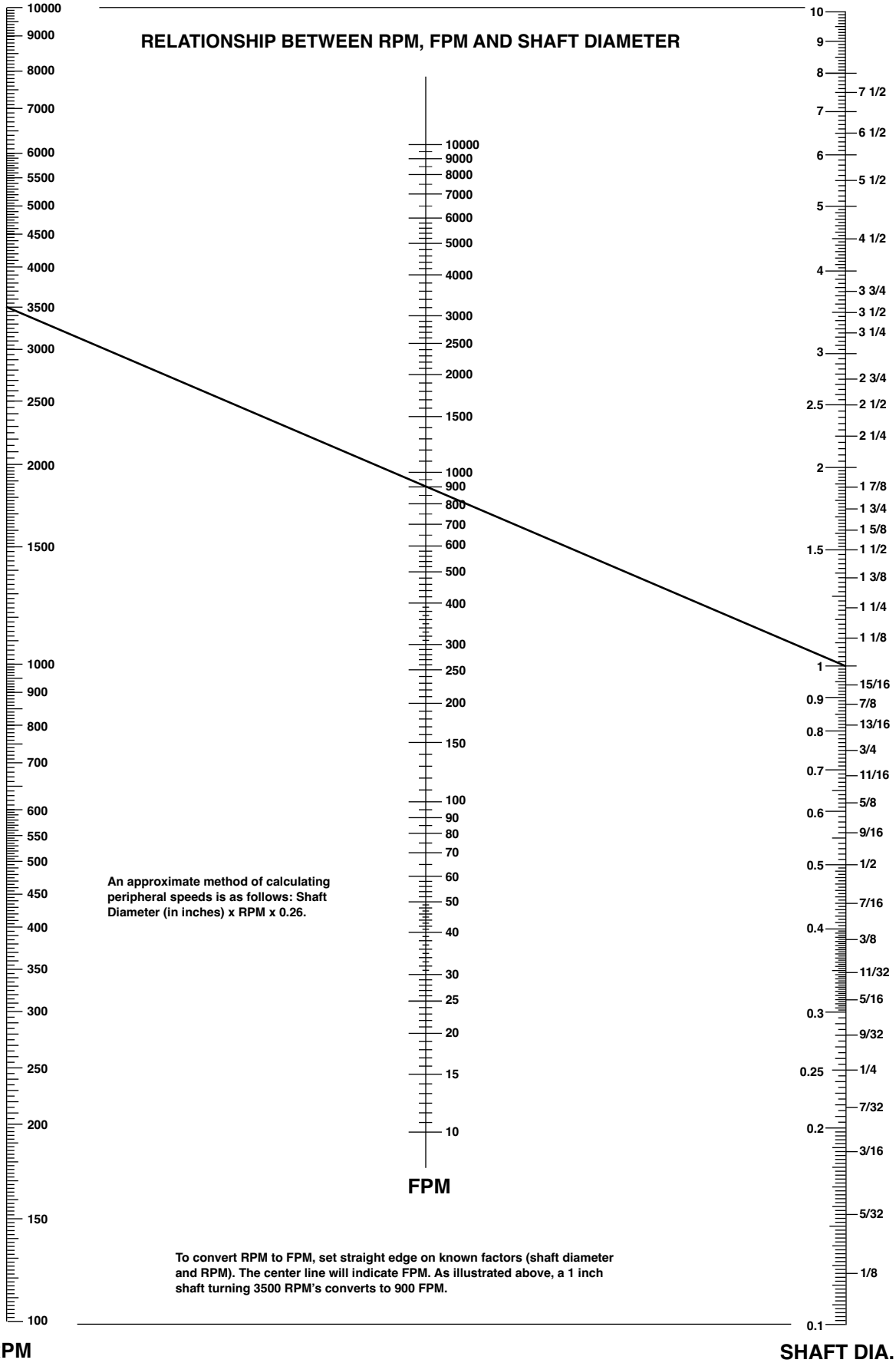

Garlock
An ENPRO Company

Tel: 1-800-448-6688
www.garlock.com

KLZ 2-56 | 03.2026