Garlock
An ENPRO Company

Garlock Metallic Gaskets

Designed to withstand extremes



Garlock Metallic Gaskets

Garlock Metallic Gaskets, a division of Garlock, specializes in the manufacturing of spiral wound, serrated metal, and metal core gaskets at its state-of-the-art facility in Houston, Texas. This facility is certified to the rigorous standards of ISO 9001 and AS9100, ensuring the highest levels of quality and precision.

Garlock Metallic Gaskets continually leads the industry with innovative solutions. Recent advancements include the TANDEM SEAL™, which offers exceptional chemical resistance paired with fire safety in one gasket, and the Garlock EDGE®, engineered to seal at lower bolt stresses while effectively eliminating inward buckling issues. These innovations, along with the entire metallic gasket range, are renowned for superior material quality, product reliability, and excellent customer service.

This catalog is provided for your convenience and information. For additional guidance, Garlock's experienced applications engineers are available to assist with your specific application requirements or technical inquiries.

For support, please contact Garlock at 1.800.448.6688.

Thank you for choosing Garlock as your trusted partner in sealing solutions.

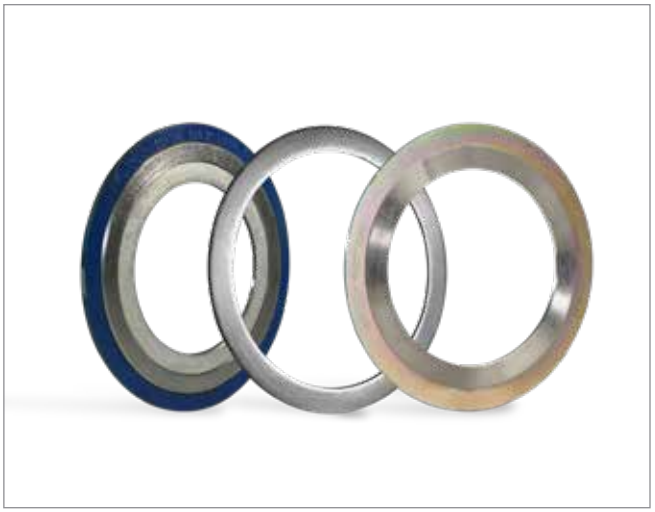

TANDEM SEAL™, THERMa-PUR®, STABL-LOCK™ and G.E.T.™ are trademarks of Garlock

EDGE®, GRAPHONIC®, FLEXSEAL®, THERMa-PUR® CMG, and TEPHONIC® are registered trademarks of Garlock

CONTENTS

Metallic Gasket Styles

Spiral Wound Gaskets 3
FLEXSEAL® RW, RWI, & SW Gaskets 4
FLEXSEAL® Lo-Load Gaskets 5
Garlock EDGE® & Dual EDGE® 6
HEAT SHIELD® Gasket 7
FLEXSEAL® H2 8
FLEXSEAL® LMF, LTG, & STG Gaskets 9
TANDEM SEAL™ 10
TAN-KAMM 10
CMG Family 11
CMG XC 12
Kammprofile 13
Style 640 & 606 Solid Metal Gaskets 14
Spiral Wound Specifications 15
Flange Types 16
Gasket Selection by Flange Type 17
Gasket Factors "M" & "Y" 18
Gasket Selection 19
Selection of Metals 20
Factors Affecting Gasket Performance 21
Flange Rotation 22
Troubleshooting 23
Gasket Installation & Torque Tables 24
Torque Tables 25-28
Torque to Stress/Bolts 29
Ordering Guide 30
Storage & Shelf Life 31
Conversions 33
Maximum Flange Bore for FLEXSEAL® RW/RWI 33
Spiral Wound Gasket Dimensions 34-42
Corrugated Metal Gasket Dimensions 43

Spiral Wound Gaskets

MANUFACTURED IN ACCORDANCE WITH ASME B16.20

Spiral wound gaskets—made with an alternating combination of formed metal wire and soft filler materials—form a very effective seal when compressed between two flanges. A v-shaped crown centered in the metal strip acts as a spring, giving gaskets greater resiliency under varying conditions. Filler and wire material can be changed to accommodate different chemical compatibility requirements. Fire safety can be assured by choosing flexible graphite as the filler material. If the load available to compress a gasket is limited, gasket construction and dimensions can be altered to provide an effective seal.

A spiral wound gasket has as many as three main metallic components; the outer center ring, the winding and the inner ring. The outer centering ring centers the gasket , and can potentially act as a compression limiter if the gasket is subjected to extremely high compressive stress. The main function of the inner ring is to provide structural integrity by preventing radial buckling within the windings. The inner ring can also help protect or shield the winding and filler from erosion or cavitation in extreme conditions.

Resiliency and strength make spiral wound gaskets an ideal choice under a variety of conditions and applications. The spiral wound gasket is a proven sealing solution that is used extensively throughout hydrocarbon processing, chemical processing, power generation, pulp and paper, aerospace, as well as other industries.

GASKET IDENTIFICATION MARKINGS REQUIRED BY ASME B16.20

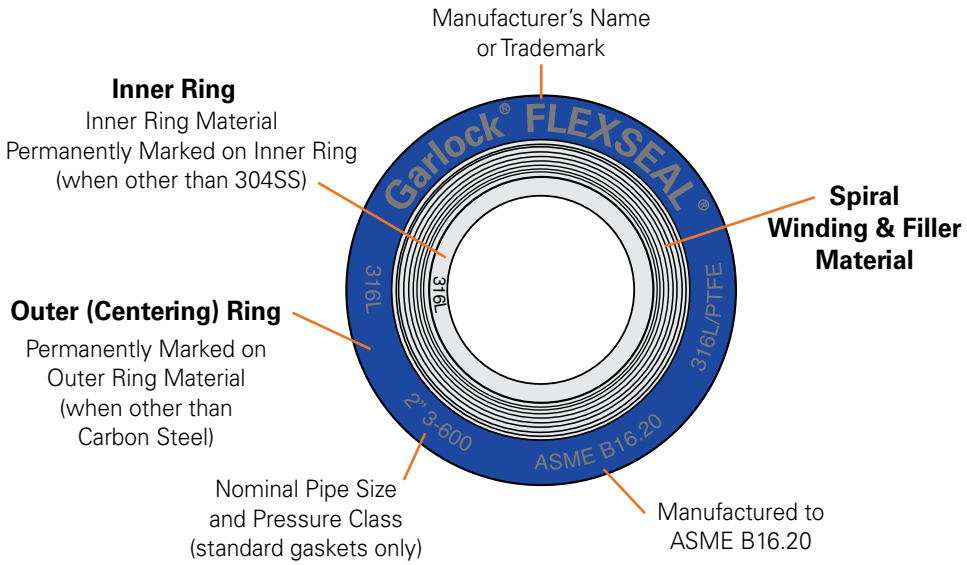

FLEXSEAL® RW, RWI, SW, & SWI Gaskets

ADVANTAGES

- Durable; easy installation and removal
- Seals pressures to flange ratings, in accordance with ASME B16.5 & B16.47
- Suitable for temperatures from cryogenic to 1,832°F (1,000°C)*
- Outer centering ring simplifies placement of sealing element on the flange face
- Designed solutions accommodate a variety of conditions by combining various metals and filler materials



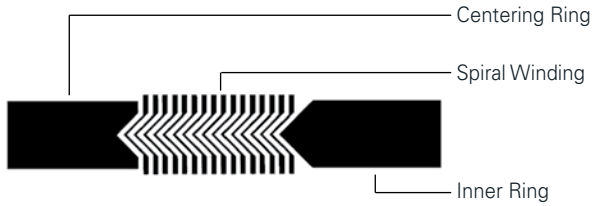

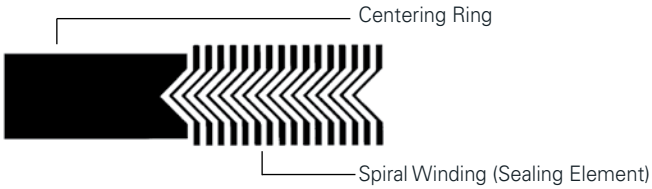

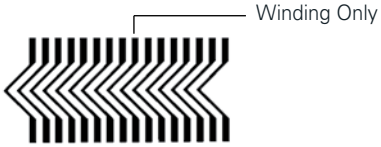

STYLE RWI

- Suitable for raised face flanges up to class 2500#
- Recommended for all gaskets, mandated for use with PTFE fillers
- Recommended for all ASME B16.20
- Inner ring can act as compression limiter and protects sealing elements from erosion & cavitation
- Inner ring prevents radial buckling

STYLE RW

- Outer centering ring accurately locates the gasket on the flange face, provides additional radial strength, and can act as a compression limiter
- Spiral winding (sealing element) consists of preformed metal and soft filler material

STYLE SW

- Suitable for tongue and groove, male-female, or groove-to-flat face flanges†
- Spiral winding only, containing preformed metal and soft filler material
- Also available with inner rings—Style SWI

STYLE SWI

- Inner ring can act as a compression limiter to prevent over compression of windings
- Spiral winding (sealing element) consists of preformed metal and soft filler material
- Inner ring prevents radial buckling

ORDERING INFORMATION

RW / RWI

When ordering specify:

- Nominal pipe size or specific gasket dimensions
- Pressure rating
- Winding and filler materials
- Centering and/or inner compression ring material

NOTES:

For M & Y factors, see page 19

* Consult Garlock Engineering for material recommendations above 850° F (450°C)

† This design does not have a compression limiter

SW

When ordering, specify:

- O.D. and I.D. dimensions (and tolerance, if other than standard - see page 16)
- Thickness of gasket
- Pressure rating
- Winding and filler material
- Inner ring material, if required (Style SWI)

FLEXSEAL® Lo-Load Gasket

Garlock Lo-Load spiral wound gaskets provide the superior sealing capabilities of a standard spiral wound gasket for flange connections with a low available bolt load. Gaskets are manufactured using a controlled manufacturing process to ensure consistent winding density across the entire sealing surface of the gasket.

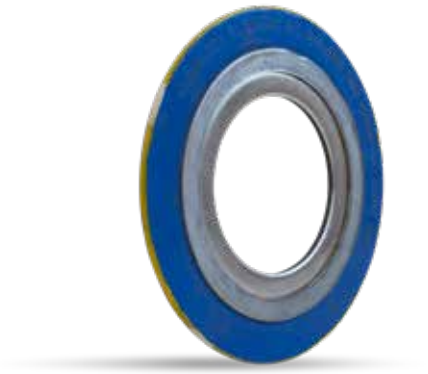

SPECIFICATIONS

Spiral Winding	Choice of Metals
Filler Material	Choice of Fillers
Configurations	• RW-LL (outer ring spiral wound) • RWI-LL (outer & inner ring spiral wound) • SW-LL (winding only) • SWI-LL (winding with inner ring)
Flange types	Raised face
Sizes	All
Pressure Classes	ASME 150# - 2500#
Temperature, Max.	To 1,832°F (1,000°C)
Gasket Factor "M"	3.00
Gasket Factor "Y"	5,000 psi

VALUE & BENEFITS

- Compensates for weak flange designs enhancing plant and personnel safety
- Ensure proper compression and an effective seal when using low strength bolts
- No unsupported exposed filler for ease of handling and installation
- High tightness level achieved with minimal compressive load
- Exceptional blow out resistance enhancing personnel safety
- Available in wide range of spiral wound designs and materials of construction
- Complies with ALL ASME B16.20 dimensions

IDEAL FOR

- Hydrocarbon processing & refining
- Petrochemical processing
- Chemical processing
- Power generation
- Pulp & paper
- Oil & Gas production

Garlock EDGE® Metallic Gasket

BENEFITS

Requires lower seating stress

- Seals at lower stress than conventional gaskets without an inner ring
- Eliminates flange damage caused by overtightening
- Relief ports allow tighter seal at lower loads

Eliminates radial buckling

- STABL-LOCK™ inner wrap construction prevents sealing element from flowing into and contaminating process stream (i.e. radial buckling)

Tightest seal

- Modified guide ring dimensions ensures proper centering on raised face flange surfaces*

Multiple applications

- Available in a dual flange (DF) design to accommodate both 150# and 300# flanges
- Select from a wide variety of metals and filler materials with a full range of temperature capabilities**
- Also available in HEAT SHIELD™ configuration for high temp services above 850°F.

Additional benefits

- Seals with lower bolt torque
- Relief tab design provides solid seating of centering ring face
- Withstands load loss caused by thermal cycling
- Inner wrap construction eliminates radial buckling
- Prevents catastrophic failure and potential damage to downstream equipment due to wire unraveling

COMPARE

The patented Garlock EDGE® spiral wound gasket is designed to reduce inward buckling

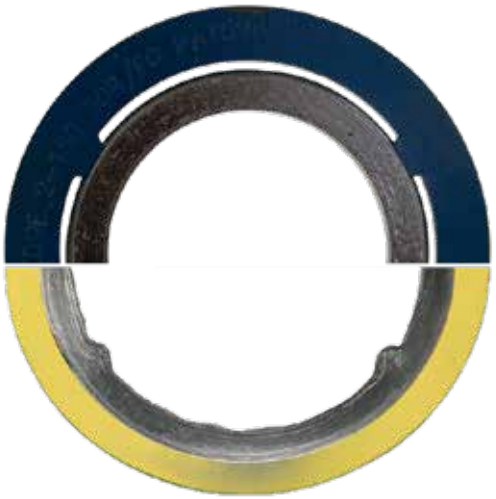

Standard spiral wound gasket shows excessive inward buckling

Gasket Style & Material	"M"	"Y" (psi)	Gb (psi)	"a"	Gs (psi)
Garlock EDGE® with 304 stainless and flexible graphite filler	2.00	5,000	793	0.4	0.31

Dual EDGE® Metallic Gasket

GARLOCK EDGE® DUAL FLANGE DESIGN

- The dual flange option is designed to accommodate both 150# and 300# pressure class flanges
- Reduces your spiral wound gasket inventory
- Specify the Garlock EDGE® DF on your next order

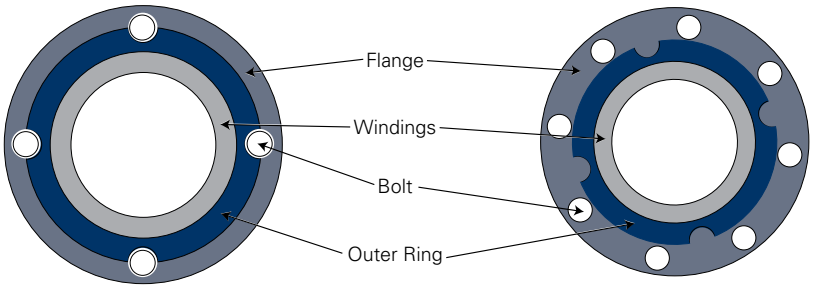

150 # **300 #**



* Not intended for use on slip-on and many light weight lap joint flanges.

** See chart on page 16.

HEAT SHIELD™ Gasket

The flexible graphite filled spiral wound gasket is widely used throughout chemical plants and refineries. Exceptional sealability and fire safety make the HEAT SHIELD gasket superior to traditional spiral wound gaskets. It's ideal for thermal oxidizing environments and provides superior performance in steam drums, hydrocarbon (catalytic) crackers, hydrogen units and exhaust manifolds.



BENEFITS

- Fire safe and rated to 1250°F (677°C)
- Flexible graphite-filled spiral wound gasket has inner and outer filler plies of THERMa-PUR®.
- THERMa-PUR® layers protect the flexible graphite center from thermal oxidizing atmospheres
- Metal wire of the gasket can be made of a wide range of materials, depending upon the application

TYPICAL APPLICATIONS

- Oxidizing environments
- Power plant steam drums
- Hydrocarbon processing catcrackers
- Chemical plant Oleflex units and ammonium nitrate service
- Hydrogen units, exhaust manifolds, and more.

CONSTRUCTION

- Heat-resistant graphite filler
- Available with heat- and oxidation-resistant THERMa-PUR®
- Spiral-wound wires of a choice of commercially available metals
- Rings of any standard metal, including INCONEL®* X750

*Inconel is a registered trademark of Inco Alloys International, Inc.

SPECIFICATIONS

Temperature, Max.	1250˚F (677˚C)
Flange Class	150# - 600#
Pipe diameters	2" to 24", specials available

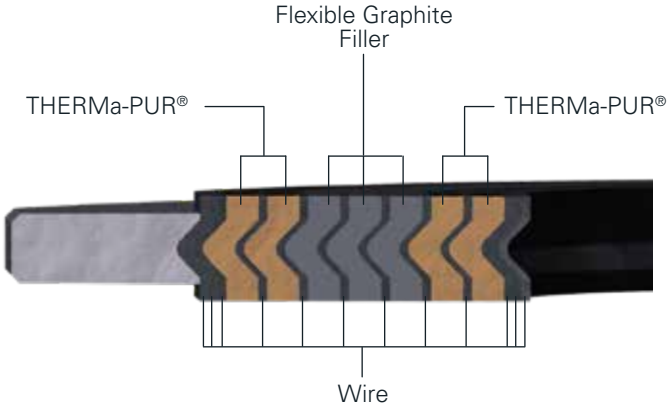

NOTE:
References made to particular applications are not a guarantee of acceptability of use for these services Contact Garlock for additional details and to discuss your particular application.

FLEXSEAL® H2 Spiral Wound Metal Gasket



The Garlock FLEXSEAL® H2 is a metal spiral wound gasket with dual sealing elements, engineered to deliver exceptional purity and fire-safe performance in the most demanding gas applications. Designed for gaseous or liquid hydrogen, and oxygen service, as well as chemicals within supporting systems, the FLEXSEAL® H2 provides reliable performance in high pressure, flammable, and extreme temperature service conditions—ideal for use in production, processing, and distribution systems that must comply with ASME B31.12 and ASME B16.20. Additionally, this gasket is cleaned and packaged for oxygen service to ensure the highest level of purity.

CONFIGURATIONS

Our standard offering is RWI featuring 316 stainless steel inner and outer rings. Additional configurations include RW and EDGE®. Other alloys are available upon request.

FEATURES & BENEFITS

- Cleaned and packaged for oxygen service to ensure no organic contaminants are introduced into the system.
- Achieve both high purity and fire-safe performance with dual sealing elements made of PTFE and graphite.
- Successfully passed API6FB fire testing.
- Primary PTFE filler wraps provide superior chemical resistance, and optimal sealability for gas or liquid service.
- Secondary flexible graphite filler wraps provide seal and system integrity in the event of a facility fire or unplanned system temperature excursion.
- Meets hydrogen and oxygen service standards with ASME B31.12-compliant design.

TYPICAL APPLICATIONS

Hydrogen piping, compressors, exchangers, and chemical support systems.

SPECIFICATIONS

		FLEXSEAL® H2 Gasket
Temperature:		
	Min.:	-425˚F (-254˚C)[1]
	Max.:	500˚F (260˚C)
Flange Class:		150# - 2500# (specials available)
Pressure Resistance:		Full vacuum to maximum flange rating

PTFE Filled Graphite Filled



INDUSTRIES SERVED

- Hydrogen
- Chemical Processing
- Power Generation
- Nuclear

MEDIA USE

- Hydrogen (gas or liquid),
- Oxygen
- Strong caustics such as potassium hydroxide
- Ultrapure water
- Steams or gases up to 400F
- Hydrocarbons
- Refrigerants
- Strong acids
- Ammonia
- Liquefied natural gas (LNG)
- Methane

DESIGN FACTORS

	Gasket Factors		Gasket Constants			Stress req'd for tightness		
Filler	M	Y (psi)	Gb (psi)	a	Gs (psi)	S 100 (psi)	S 1,000 (psi)	S 10,000 (psi)
Graphite	2.50	4,500	1,607	0.214	4	4,305	7,047	11,535

NOTE 1 – Garlock has historically recommended a lower temperature of -150˚F (-100˚C) for 316L. However, ASME B31.12 - Hydrogen Piping & Pipelines publishes a lower temperature limit of -425˚F (-254˚C) for 316L pipes and tubes, plates, & sheets, in hydrogen service.

NOTE 2 - ASME B16.20 mandates inner rings on all PTFE filled spiral wound gaskets. Also, gaskets ordered in compliance with ASME B16.20 are sold with inner rings (FLEXSEAL RWI) unless otherwise specified by the customer at the time of order.

FLEXSEAL® LMF, LTG and STG Gaskets

FOR MALE-FEMALE, TONGUE AND GROOVE FLANGES

- Spiral winding of preformed metal and soft filler material—for use where no space is provided for a compression guide ring
- Inner Diameter of windings is reinforced with several plies of metal without filler to give greater stability
- Style LMF - large male-female flanges
  Style LTG - large tongue and groove flanges
  Style STG - small tongue and groove flanges

APPLICATIONS

- Valves
- Heat exchangers
- Pumps
- Vessels
- Flanges

STYLE LMF GASKET DIMENSIONS

Nominal Pipe Size (Inches)	150# - 1500#		2500#	
	I.D. (Inches)	O.D. (Inches)	I.D. (Inches	O.D. (Inches
1/2	1	1-3/8	13/16	1-3/8
3/4	1-5/16	1-11/16	1-1/16	1-11/16
1	1-1/2	2	1-1/4	2
1-1/4	1-7/8	2-1/2	1-5/8	2-1/2
1-1/2	2-1/8	2-7/8	1-7/8	2-7/8
2	2-7/8	3-5/8	2-3/8	3-5/8
2-1/2	3-3/8	4-1/8	3	4-1/8
3	4-1/4	5	3-3/4	5
3-1/2	4-3/4	5-1/2	—	—
4	5-3/16	6-3/16	4-3/4	6-3/16
5	6-5/16	7-5/16	5-3/4	7-5/16
6	7-1/2	8-1/2	6-3/4	8-1/2
8	9-3/8	10-5/8	8-3/4	10-5/8
10	11-1/4	12-3/4	10-3/4	12-3/4
12	13-1/2	15	13	15
14	14-3/4	16-1/4	—	—
16	17	18-1/2	—	—
18	19-1/4	21	—	—
20	21	23	—	—
24	25-1/4	27-1/4	—	—

**Measured across the metallic portion of the gasket not including the filler, which may protrude slightly. The thickness tolerance exception is +.010" / -.005" on gaskets with 1) less than a 1" ID and greater than 26" ID, 2) PTFE filled gaskets, and 3) gaskets with flange widths of 1" or greater.

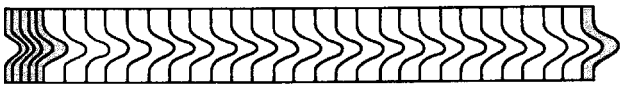

Cross Sectional View of Winding

ORDERING INFORMATION

When ordering, specify:

- Nominal pipe size
- Pressure rating
- Winding materials (304 SS is standard, filler material must be specified)
- Thickness of winding (0.125" is standard)

STYLE LTG GASKET DIMENSIONS

Nominal Pipe Size (Inches)	150# - 1500#	
	I.D. (Inches)	O.D. (Inches)
1/2	1	1-3/8
3/4	1-5/16	1-11/16
1	1-1/2	2
1-1/4	1-7/8	2-1/2
1-1/2	2-1/8	2-7/8
2	2-7/8	3-5/8
2-1/2	3-3/8	4-1/8
3	4-1/4	5
3-1/2	4-3/4	5-1/2
4	5-3/16	6-3/16
5	6-5/16	7-5/16
6	7-1/2	8-1/2
8	9-3/8	10-5/8
10	11-1/4	12-3/4
12	13-1/2	15
14	14-3/4	16-1/4
16	17	18-1/2
18	19-1/4	21
20	21	23
24	25-1/4	27-1/4

STYLE STG GASKET DIMENSIONS

Nominal Pipe Size (Inches)	150# - 1500#	
	I.D. (Inches)	O.D. (Inches)
1/2	1	1-3/8
3/4	1-5/16	1-11/16
1	1-1/2	1-7/8
1-1/4	1-7/8	2-1/4
1-1/2	2-1/8	2-1/2
2	2-7/8	3-1/4
2-1/2	3-3/8	3-3/4
3	4-1/4	4-5/8
3-1/2	4-3/4	5-1/8
4	5-3/16	5-11/16
5	6-5/16	6-13/16
6	7-1/2	8
8	9-3/8	10
10	11-1/4	12
12	13-1/2	14-1/4
14	14-3/4	15-1/2
16	16-3/4	17-5/8
18	19-1/4	20-1/8
20	21	22
24	25-1/4	26-1/4

WARNING:
Properties/applications shown throughout this brochure are typical. Your specific application should not be undertaken without independent study and evaluation for suitability. For specific application recommendations consult Garlock. Failure to select the proper sealing products could result in property damage and/or serious personal injury.

Performance data published in this brochure has been developed from field testing, customer field reports and/or in-house testing.

While the utmost care has been used in compiling this brochure, we assume no responsibility for errors. Specifications subject to change without notice. This edition cancels all previous issues. Subject to change without notice.

TANDEM SEAL™

The TANDEM SEAL™ Spiral Wound Gasket is designed to provide chemical resistance and fire safety in a single gasket. It seals to the bore of the flange in order to limit crevice corrosion inherent in hydrofluoric and sulfuric acid alkylation processes. Additionally, the design reduces erosion and bacterial contamination compared to standard spiral wound gaskets, which do not cover the flange face near the I.D.

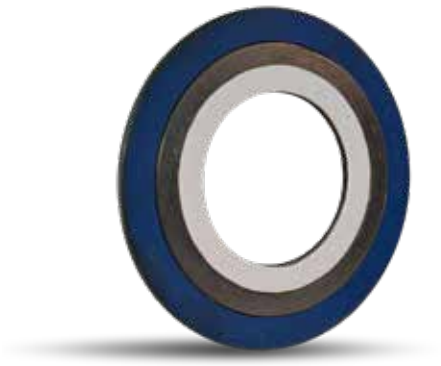

BENEFITS

Chemical-resistant and fire-safe

- TANDEM SEAL with PTFE envelope withstands aggressive chemicals and corrosive media (2" NPS & larger)
- TAN-KAMM with PTFE & Graphite facing for flange sizes smaller than 2"
- Fire-safe—passed independent fire tests
- Two sealing elements significantly reduce corrosion and bacterial contamination of flanges
- Seals to the ID of the pipe bore - specify pipe schedule when ordering
- No metal contact with the media (envelope design)
- Withstands high pressure

SEAL COMPARISON

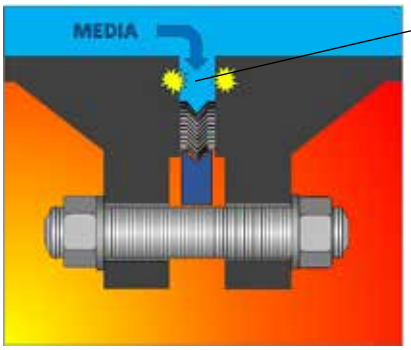

Standard Gasket

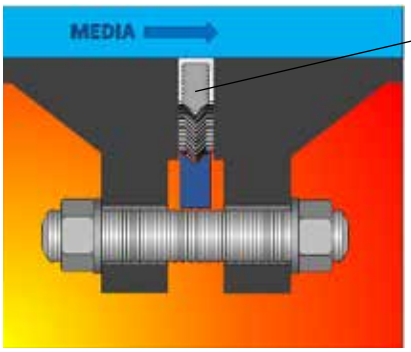

TANDEM SEAL™ Design

Available in 2" - 24" NPS

Patent No. 5511797

TANDEM SEAL (2" NPS AND LARGER)

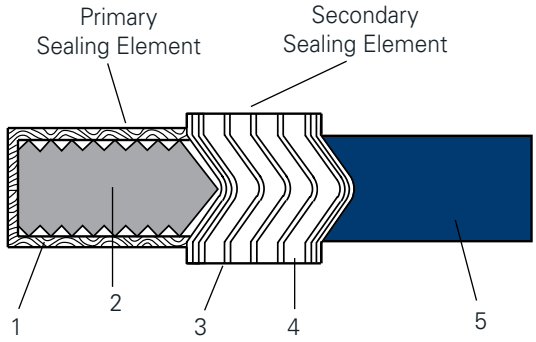

1. PTFE envelope
2. Kammprofile inner ring
3. Metal windings
4. Filler material
5. Outer guide ring

TAN-KAMM (SMALLER THAN 2" NPS)

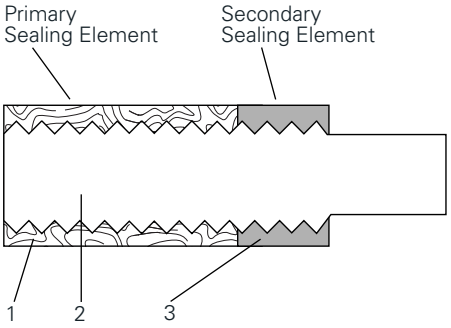

1. Virgin PTFE
2. Serrated Core)core and integrated ring)
3. Flexible Graphite Facing

The TANDEM SEAL™ family of gaskets can be manufactured utilizing the vast array of commercially available materials for the inner ring, winding and outer ring. Our applications Engineering team is available to discuss media compatible materials.

CMG Family of Gaskets

Corrugated metal gaskets for superior reliability

GARLOCK CMG FAMILY

The CMG (Corrugated Metal Gasket) family of gaskets provide superior sealing performance and reliability, even in the most difficult applications. Each of the five styles combines a corrugated metal core with compressible sealing elements of various materials, providing resistance to a wide range of harsh conditions, including extreme temperature, corrosive chemicals, thermal cycling, and vibration resistance.

GRAPHONIC® GASKET STYLE 603



With flexible graphite sealing element

- Accommodates a wide range of temperatures
- Seals effectively during thermal cycling
- Fire safe - passes API 6FB fire testing
- Chemically resistant
- Long service life

THERMA-PUR® CMG GASKET STYLE 613



With THERMa-PUR® sealing element

- Provides electrical isolation reducing the possibility of corrosion between flanges of dissimilar metals.
- Improved resistance to oxidizing media
- Withstands temperatures up to 1832˚F (1000˚C)
- Hydrophobic properties

TEPHONIC® GASKET STYLE 604



With ePTFE sealing element

- Chemically inert
- Forms a tight seal under low bolt load
- Conforms to minor sealing surface imperfections
- Withstands temperatures to 500˚F (260˚C)

G.E.T.™ GASKET STYLE 607



With graphite and ePTFE sealing element

- Combines fire safety with chemical resistance
- Conforms to minor sealing surface imperfections
- Rigid yet compressible

FEATURES AND BENEFITS

- Excellent resistance against both chemical attack and high temperatures
- Reducing product loss through leakage in pipe and heat exchanger flanges
- Eliminating monitoring due to low fugitive emission levels
- Fewer industrial accidents caused by sudden gasket failure
- Preventing costs associated with production loss through plant shutdown and environmental clean-up costs

SEALING ELEMENTS

- Flexible graphite
- ePTFE
- THERMa-PUR®
- Combination of sealing elements

STANDARD METALS

- Carbon steel
- Stainless 304
- Stainless 316
- INCONEL 600®
- INCONEL 625®
- INCOLOY 825®
- HASTELLOY C276®
- MONEL 400®
- Titanium Grade 2
- Duplex 2205
- Contact Garlock if the metal you require is not shown

INCONEL® is a registered trademark of Inco Alloys International, Inc.
INCOLOY® is a registered trademark of Inco Alloys International, Inc.
HASTELLOY® is a registered trademark of Haynes International
MONEL® is a registered trademark of International Nickel

ENGINEERING DATA

	GRAPHONIC®	TEPHONIC® & G.E.T.™	THERMa-PUR® CMG
Temperature:*			
Min.:	-400˚F (-240˚C)	-400˚F (-240˚C)	1832˚F
Max. in atmosphere:	850˚F (454˚C)	500˚F (260˚C)	(1000˚C)
Max. in steam:	1200˚F (650˚C)	-	
Pressure, max.:	1000psig (70bar)	1000psig (70bar)	1000psi (70 bar)
P x T, max.			
1/16" thickness:	700,00 (25,000)†	-	-
1/8" thickness:	350,000 (12,000)†	250,000 (8,500)	600,000 (21,500)

CONSTRUCTION

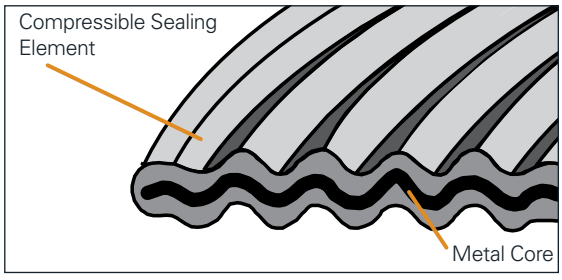

* Minimum & maximum temperatures rating may be limited by the metal core, not the facing material
† PxT max. = psig x ˚F (bar x ˚C)
NOTE: When approaching maximum temperatures, consult the Garlock Metallic Gasket Engineering Department, 1.877.GARLOCK

Garlock CMG XC - Xtreme Chemical

Chemical-Resistant, Fire Safe Corrugated Metal Gasket with GYLON® & THERMa-PUR®



Garlock's CMG XC Corrugated Metal Gasket with GYLON® and THERMa-PUR® offers a truly chemical-resistant fire-safe solution. With a metallic corrugated core that uses both GYLON® Style 3545 and THERMa-PUR® as sealing elements, the CMG XC provides fire safety and excellent compatibility across the chemical spectrum.

Traditional fire-safe solutions rely on graphite, which is not resistant to most strong oxidizing chemicals. Additionally, graphite can introduce dark particles that contaminate the media. This characteristic makes graphite unsuitable for most chemical services and unattractive for high-purity applications, such as food and pharmaceuticals. The CMG XC is graphite-free and well-suited for high-purity applications across a wide range of industries.

As a corrugated metallic gasket with GYLON® 3545 as the primary sealing element, the CMG XC provides excellent chemical compatibility, compressibility and purity. With THERMa-PUR® as its secondary sealing element, the CMG XC has the added benefit of being fire-safe.

KEY ATTRIBUTES

- Passes API 6FB fire testing requirements
- Provides a combination of fire safety and chemical compatibility across a range of conditions
- Prevents contaminants in high-purity applications
- Offers compressibility and forgiveness/conformability
- Primary sealing element (GYLON® 3545) in contact with the media is FDA compliant

DESIGN

- GYLON® 3545 as the primary sealing element
- THERMa-PUR® as the secondary sealing element
- Highly compressible corrugated metal core available in a range of metals
- Available both in ASME B16.21 sizes, as well as non-standard dimensions

TYPICAL PHYSICAL PROPERTIES

Temperature:	
Max. in atmosphere:	500° F (260° C)
Pressure. max.:	1000 psig (70 bar)
P x T, max.	
1/16" thickness:	–
1/8" thickness	250,000 (8,500)

INDUSTRIES SERVED

- Food
- Pharmaceuticals
- Chemical Processing
- Hydrocarbon Processing

Explore the full range of Garlock's fire-safe gasket portfolio on page 4 or visit garlock.com to learn more.

Garlock Kammprofile Gasket

BENEFITS

- Seals less-than-perfect flanges
- Performance replacement for jacketed heat exchanger gaskets
- Fire safe—passed API 6FB fire tests
- Available with THERMa-PUR® facing

APPLICATIONS

- Accommodates standard ASME flanges as well as weaker and non-circular flanges
- Economical replacement for jacketed heat exchanger gaskets
- Handles pressures from vacuum to Class 2500
- Withstands temperatures from cryogenics to 1,832°F (1,000°C)

SERRATED SOLID METAL CORE

- Solid metal core resists cold flow, over compression and blowout
- Rigid core provides exceptional stability, even in large sizes, and facilitates handling and installation
- Available in wide variety of metals

SOFT, DEFORMABLE SEALING MATERIAL

- Under compression, fills seating surface imperfections to form a tight connection
- Seals under low stress—ideal for weaker flanges
- Withstands extreme fluctuations in temperatures and pressures

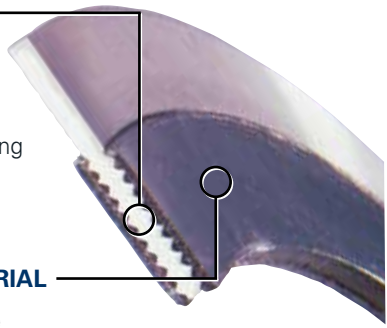

STYLE SELECTION GUIDE

Garlock Kammprofile™ Styles	Centering Ring		Flange			
	Integral	Floating	Male/Female	Tongue/Groove	Flat Face	Raised Face
642 A*			•	•	•	•
642 AR	•					•
642 AR2		•				•

*Available without sealing element

» Parallel root core is standard design

» Integral centering ring ensures optimum gasket positioning

» Floating centering ring allows for expansion and contraction during thermal cycling

Sealing Element	Max. Temperature	
THERMa-PUR®	500˚F	260˚C
Flex. Graphite	850˚F	454˚C
PTFE	500˚F	260˚C

GYLON® is a registered trademark of Garlock.

Style 640 Solid Metal Gaskets

This plain solid metal gasket is engineered for applications requiring high mechanical strength, excellent heat conductivity, and robust resistance to temperature, corrosion, and pressure. When sufficient bolting force is applied, the gasket enables an extremely tight seal, ensuring reliable performance for demanding conditions. It can be supplied in any custom configuration to meet specific operational needs.



BENEFITS

- High mechanical strength
- Heat conductivity
- Resistance to temperature, pressure, and corrosion

Style 640 - Solid Metal

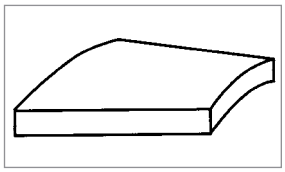

This gasket offers high mechanical strength, and good resistance to temperature, corrosion and pressure. Bolting stress and flange surface finish are key to the performance of this design.

Style 606 Solid Metal Gaskets with Facing

This gasket is an enhanced version of the plain solid metal gasket (Style 640), featuring a layer of soft-facing material. The additional covering is designed to effectively fill any imperfections present on flange faces, which may occur in flanges that have not been properly maintained. This design ensures a more reliable seal and improves overall application performance.



BENEFITS

- Tight sealing
- High mechanical strength
- Heat conductivity
- Resistance to temperature, pressure, and corrosion

Style 606 - Solid Metal with Facing Graphite Covering

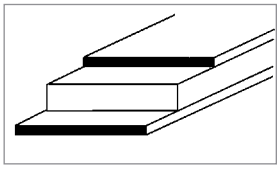

A solid metal gasket covered with a layer of soft facing material. This covering layer seals at a low load and fills voids and imperfections in the flange.

Spiral Wound Specifications

TEMPERATURE LIMITS FOR COMMON METALS (ASME B16.20)

Material	Minimum		Maximum		Abbreviation	Guide Ring Edge Color Code
	°F	°C	°F	°C		
304 Stainless Steel	-320	-195	1,400	760	304	Yellow
316L Stainless Steel	-150	-100	1,400	760	316L	Green
317L Stainless Steel	-150	-100	1,400	760	317L	Maroon
321 Stainless Steel	-320	-195	1,400	760	321	Turquoise
347 Stainless Steel	-320	-195	1,700	925	347	Blue
Carbon Steel	-40	-40	1,000	540	CRS	Silver
20Cb-3 (Alloy 20)	-300	-185	1,400	760	A-20	Black
HASTELLOY® B 2	-300	-185	2,000	1,090	HAST B	Brown
HASTELLOY® C 276	-300	-185	2,000	1,090	HAST C	Beige
INCOLOY® 800	-150	-100	1,600	870	IN 800	White
INCOLOY® 825	-150	-100	1,600	870	IN 825	White
INCONEL® 600	-150	-100	2,000	1,090	INC 600	Gold
INCONEL® 625	-150	-100	2,000	1,090	INC 625	Gold
INCONEL® X750	-150	-100	2,000	1,090	INX	No Color
MONEL® 400	-200	-130	1,500	820	MON	Orange
Nickel 200	-320	-195	1,400	760	NI	Red
Titanium	-320	-195	2,000	1,090	TI	Purple

STANDARD THICKNESSES

Winding	Ring(s) Inner & Outer
0.125"	3/32"
0.175"	1/8"
0.250"	3/16"
0.285"	3/16"

TEMPERATURE LIMITS FOR FILLER MATERIAL (ASME B16.20)

Material	Minimum		Maximum COT		Abbreviation	Guide Ring Edge Stripe Color Code
	°F	°C	°F	°C		
Ceramic	-350	-212	2,000	1,090	CER	Light Green
Flexible Graphite	-350	-212	850	454	F.G.	Gray
PTFE	-400	-240	500	260	PTFE	White
4122 THERMa-PUR®	-	-	1,832	1,000	4122	Light Blue

STANDARD TOLERANCES***

For non-ASME windings

Gasket Diameter	I.D.	O.D.
Up to 1"	+1/64" -0	+0 -1/32"
1" to 24"	+1/32" -0	+0 -1/32"
24" to 36"	+3/64" -0	+0 -1/16"
36" to 60"	+1/16" -0	+0 -1/16"
60" and above	+3/32" -0	+0 -3/32"

NOTE:
Thickness tolerance is ±0.005" on spiral wound gaskets, except +0.010" -0.005" on gaskets with:

- Less than 1" ID and greater than 26" ID
- PTFE filler
- Flange widths of 1" or greater

†† Spiral wound gaskets can be made to large maximum widths if required. Call Garlock for details.

For spiral wound gaskets not otherwise specified.

Gasket		Width Limits		Compressed Thickness
Thickness	Tolerance	Minimum	Maximum	
0.125"**	±0.005"	3/16"	1"††	0.090 - 0.100"
0.175"**	±0.005"	1/4"	1-1/2"††	0.125 - 0.135"
0.250"**	±0.005"	5/16"	1-1/2"††	0.180 - 0.200"
0.285"**	±0.005"	5/16"	1-1/2"††	0.200 - 0.220"

HASTELLOY® is a registered trademark of Haynes International.
INCOLOY® and INCONEL® are registered trademarks of Inco Alloys International, Inc.
MONEL® is a registered trademark of International Nickel.

** Measured across the metallic portion of the gasket not including the filler, which may protrude slightly.

*** Tolerances for standard ASME gaskets are found under NOTES in the tables of dimensions.

Flange Types

FLAT FACE

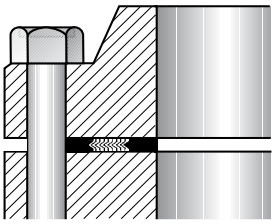

Unconfined Gasket

- Mating faces of both flanges are flat
- Gasket may be ring type, or full face, which covers the entire face both inside and outside the bolts (ring gaskets are not acceptable in many flat face flanges) due to flange materials of construction

MALE-FEMALE

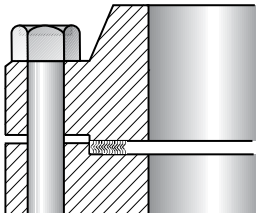

Semi-Confined Gasket

- Depth of female (recessed) face normally equal to or less than height of male (raised) face, to prevent metal-to-metal contact during gasket compression
- Recessed O.D. normally is not more than 1/16" larger than the O.D. of the male face
- Joint must be pried apart for disassembly

RAISED FACE

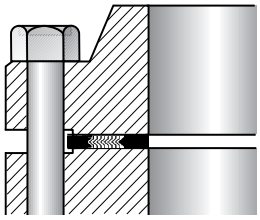

Unconfined Gasket

- Flange sealing surface is reduced to achieve higher seating stress
- Gasket is usually ring type, contained entirely within bolt circle

TONGUE AND GROOVE

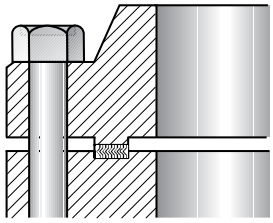

Fully Confined Gasket

- Groove depth is equal to or less than tongue height
- Groove usually not over 1/16" wider than tongue
- Gasket dimensions will match tongue dimensions
- Joint must be pried apart for disassembly

GROOVE TO FLAT

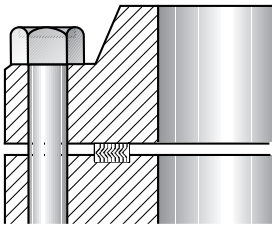

Fully Confined Gasket

- One flange face is flat, the other is recessed
- For applications requiring accurate control of gasket compression
- Only resilient gaskets are recommended—spiral wound, hollow metal O-ring, pressure-actuated, and metal-jacketed gaskets

Gasket Selection by Flange Type

	RW	RWI	EDGE®	TANDEM SEAL	SW	LMF	LTG	STG	HEAT SHIELD™	FLEXSEAL® H2	CMG
Raised Face	•	•	•	•					•	•	•
Male-Female					•	•	•	•			
Tongue & Groove					•		•	•			
Groove to Flat					•						

FLANGE SURFACE FINISH

The surface finish of a flange is described as follows:

Roughness

- Average of peaks and valleys measured from midline of flange surface (in micro-inch or micro-meter)

Preferred finish per ASME B16.5 or B16.47;

- Serrated finish cut with a 1/16" radius (1.5mm) round tool.
- 45-55 grooves per inch (1.8 to 2.2 grooves per mm)

RECOMMENDED VALUES

Spiral Wound Gaskets ..... 125-250 micro-inch (3.2-6.3 micro-meter)
Corrugated Metal Gaskets (CMG) ..... 125-250 micro-inch (3.2-6.3 micro-meter)
Kammprofile Gaskets ..... 125-250 micro-inch (3.2-6.3 micro-meter)
Solid Metal Gaskets ..... 63-80 micro-inch (1.6-2.0 micro-meter)

NOTE:
These values are suggested only and not mandatory; however they are based upon the best cross-section of successful design experience currently available.

WARNING:
Properties/applications shown throughout this brochure are typical. Your specific application should not be undertaken without independent study and evaluation for suitability. For specific application recommendations consult Garlock. Failure to select the proper sealing products could result in property damage and/or serious personal injury.

Performance data published in this brochure has been developed from field testing, customer field reports and/or in-house testing.

While the utmost care has been used in compiling this brochure, we assume no responsibility for errors. Specifications subject to change without notice. This edition cancels all previous issues. Subject to change without notice.

Gasket Factors "M" and "Y"

"M" and "Y" data are to be used for flange designs only as specified in the ASME Boiler and Pressure Vessel Code Division 1, Section VIII, Appendix 2. They are not meant to be used as gasket seating stress values in actual service. Our bolt torque tables give that information and should be used as such.

"M" - Maintenance Factor

A factor that provides the additional preload needed in the flange fasteners to maintain the compressive load on a gasket after internal pressure is applied to a joint.

$M = (W - A_2P) / A_1P$

Where: W = Total Fastener force (lb. or N)
A_2 = Inside area of gasket (in.^{2} or mm^2)
P = Test pressure (psig or N/mm^2)
A_1 = Gasket area (in.^{2} or mm^2)

"Y" - Minimum Design Seating Stress

The minimum compressive stress in pounds per square inch (or bar) on the contact area of the gasket that is required to provide a seal at an internal pressure of 2 psig (0.14 bar).

$Y = W / A_1$

Gasket Design		Gasket Material	Gasket Factor "M"	Min. Design Seating Stress "Y" psi
Spiral wound metal, graphite or PTFE filled		Stainless Steel or MONEL®	3.00	10,000
Garlock EDGE®		Stainless Steel or MONEL®	2.00	5,000
Kammprofile gasket		Stainless steel core Flexible graphite facing	4.00	4,000[1]
Garlock GRAPHONIC® (Style 603)		Stainless Steel and flexible graphite facing Liquid service:	1.90 (1/16") 2.2 (1/8") 2.00	1,500 (1/16") 2,000 (1/8") 900
TEPHONIC® (Style 604)		Stainless Steel & PTFE facing	2.0 (1/8")	2,500 (1/8")
G.E.T. (Style 607)		Stainless Steel & PTFE/Flexible Graphite facing	2.0 (1/8")	1,600 (1/8")
Solid flat metal	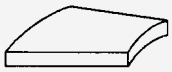	Soft aluminum Soft copper or brass MONEL® or 4%-6% chrome Stainless Steel	4.00 4.75 5.50 6.00 6.50	8,800 13,000 18,000 21,800 26,000

This table lists many commonly used gasket materials and contact facings with suggested design values of "M" and "Y" that generally have proven satisfactory in actual service when using effective gasket seating width B. The design values and other details given in this table are suggested only and are not mandatory.

MONEL® is a registered trademark of International Nickel.

NOTE 1:
Actual Kammprofile tests show a Y = 1,000 psi. This is considered too low for effective flange design, so a Y = 4,000 psi is suggested.

Gasket Selection

SPIRAL WOUND GASKETS

One of the best all-around seals, the spiral wound gasket offers a low-cost solution that has the ability to handle temperature and pressure fluctuations. Multiple plies of metal and filler in the spiral create a barrier that reduces the possibility of leaks.

TEMPERATURE AND CHEMICAL CONSIDERATIONS

Be certain that the gasket you order is as resistant as possible to the media and temperature involved. Check the chemical compatibility of the metal as well as the filler material for the media to be sealed. As a general rule, the metal used in either the spiral winding or Kammprofile gasket should be similar to the flange material.

The compressibility of flexible graphite makes it an excellent filler material for metallic gaskets. Flexible graphite may be used in services with temperatures up to 850°F (450°C), though it should not be used with strong oxidizers such as nitric or sulfuric acid.

PTFE filler material provides excellent chemical resistance at temperatures below 500°F (260°C). In accordance with ASME B16.20, an inner ring is required when using conventional PTFE filler materials, in order to protect the winding from radial buckling.

See page **17** for the temperature limits of common metals and filler materials.

OPERATING PRESSURE

Operating pressures have a direct effect on the construction and selection of metallic gaskets. Higher pressures raise the potential for gasket blowout, while lower pressure applications require a gasket design that seals under lower bolt loads.

Garlock gaskets suitable for high pressure include:

- Kammprofile gaskets
- Spiral wound gaskets with inner ring
- Solid metal gaskets

Low pressure gaskets include:

- Corrugated metal gaskets
- Garlock Kammprofile gaskets
- The Garlock EDGE® gasket

OTHER METAL GASKETS

Garlock manufactures a wide variety of, spiral-wound, corrugated and solid metal gaskets for heat exchanger and coker applications. Kammprofile gaskets are also available in heat exchanger configurations.



WARNING:
Properties/applications shown throughout this brochure are typical. Your specific application should not be undertaken without independent study and evaluation for suitability. For specific application recommendations consult Garlock. Failure to select the proper sealing products could result in property damage and/or serious personal injury.

Performance data published in this brochure has been developed from field testing, customer field reports and/or in-house testing.

While the utmost care has been used in compiling this brochure, we assume no responsibility for errors. Specifications subject to change without notice. This edition cancels all previous issues. Subject to change without notice.

Selection of Metals

The chemical resistance of gaskets are governed by their materials of construction. The selection is generally based on chemical resistance, heat resistance and cost. The most popular metals include:

- Carbon Steel
- Stainless Steel 304
- Stainless Steel 316
- INCONEL® 600*
- Nickle 200
- HASTELLOY C® 276†
- MONEL® 400‡
- INCONEL® 625*
- INCOLOY® 825*
- INCONEL® 750

The selection of a metal to be used in a gasket that is suitably resistant to corrosive media or to high temperature involves many considerations. Garlock recommends that designers contact the manufacturers of alloyed material, who conduct laboratory corrosive tests and in-plant corrosion testing.

CONCENTRATION OF CORROSIVE AGENTS

Dilute solutions are not necessarily less corrosive than those of full strength, and the reverse is often the case. Probably the most familiar example of this is the action of sulfuric acid on iron; concentrations over 90% acid may be handled by iron without much difficulty, but below this concentration, the rate of attack will increase rapidly with an increase in dilution.

PURITY OF CORROSIVE AGENTS

Purity, in this instance, means the absence of contaminating amounts of other corrosive compounds. For example, the corrosive attack by compounds that are derivatives of an acid: in the pure state these compounds may be relatively inert, but if contaminated by any carry-over of free acid they must be handled more carefully.

TEMPERATURE

Besides its effects upon the mechanical properties of the gasket, the temperature of the corrosive agent will have a marked influence upon the rate of attack.

FORMS OF CORROSION

- General corrosion
- Galvanic corrosion
- Concentration cell or crevice corrosion
- Chemical pitting
- Intergranular corrosion
- Effects of stress on corrosion
  - › Corrosion fatigue
  - › Stress corrosion cracking

CORROSIVE ENVIRONMENTS

- Atmospheric corrosion
- Corrosion by water, acids
- Corrosion by alkalies, salts, fluorine
- Corrosion by chlorines and hydrogen
- Corrosion by chlorides

* INCONEL® and INCOLOY® are registered trademarks of Inco Alloys International, Inc.
† HASTELLOY® C is a registered trademark of Haynes International.
‡ MONEL® is a registered trademark of International Nickel.



Factors Affecting Gasket Performance

A gasket is any deformable material which, when clamped between essentially stationary faces, prevents the passage of media across the gasketed connection.

Compressing the gasket material causes the material to flow into the imperfections of the sealing areas and create a seal. This seal prevents the escape of the contained media. In order to maintain this condition, sufficient load must be applied to the connection to oppose the hydrostatic end force created by the internal pressure of the system.

Gasket performance depends on a number of factors, including:

1. **Gasket Metal and Filler Material:** The materials must withstand the effects of:
   a. **Temperature:** Temperature can adversely affect mechanical and chemical properties of the gasket, as well as physical characteristics such as oxidation and resilience.
   b. **Pressure:** The media or internal piping pressure can blow out the gasket across the flange face.
   c. **Media:** The gasket materials must be resistant to corrosive attack from the media.
2. **Joint Design:** The force holding the two flanges together must be sufficient to prevent flange separation caused by hydrostatic end force, resulting from the pressure acting on the internal area.
3. **Proper Bolt Load:** If the bolt load is insufficient to deform the gasket, or is so excessive that it crushes the gasket, a leak will occur.
4. **Surface Finish:** If the surface finish is not suitable for the gasket, a seal will not be created.

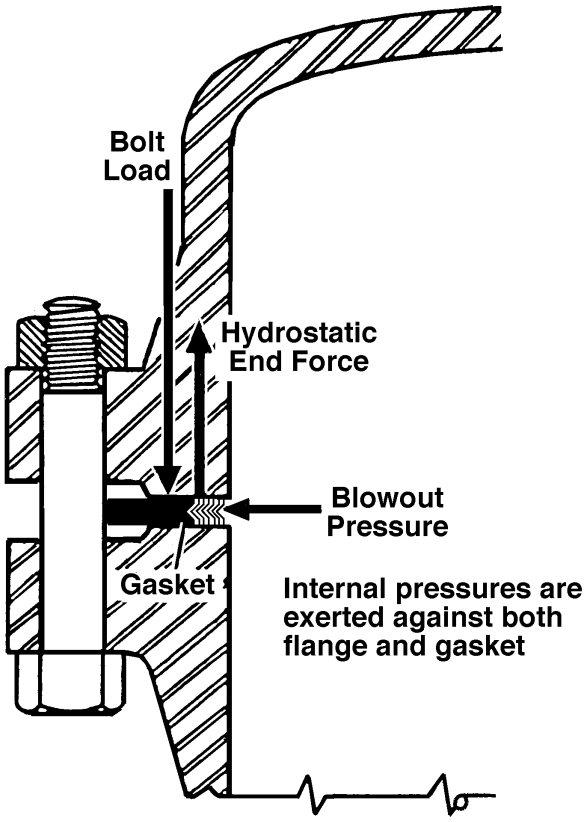

Forces Acting on a Gasket

WARNING:
Properties/applications shown throughout this brochure are typical. Your specific application should not be undertaken without independent study and evaluation for suitability. For specific application recommendations consult Garlock. Failure to select the proper sealing products could result in property damage and/or serious personal injury.

Performance data published in this brochure has been developed from field testing, customer field reports and/or in-house testing.

While the utmost care has been used in compiling this brochure, we assume no responsibility for errors. Specifications subject to change without notice. This edition cancels all previous issues. Subject to change without notice.

Flange Rotation

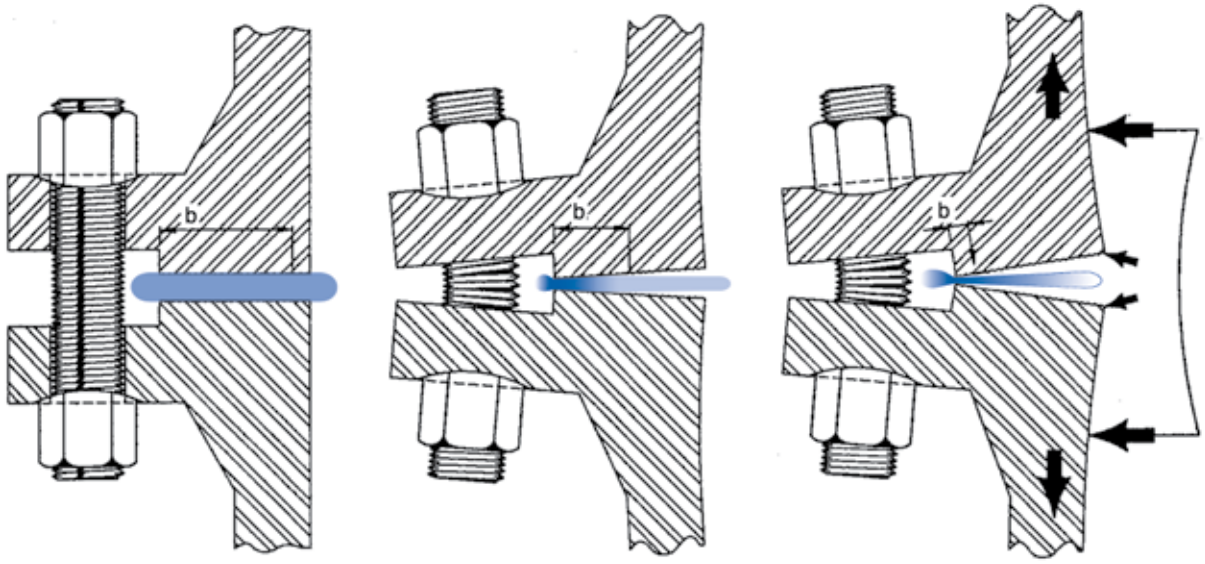

WHAT IS FLANGE ROTATION?

A common problem in the pressure vessel and piping world is the phenomenon called flange rotation. It is usually encountered under bolt tightening with a raised face flange. The outer edges of a raised face flange are pulled towards each other when the bolts are tightened, and relieved towards the inside of the vessel or pipe. See illustration.

HOW MUCH FLANGE ROTATION?

Petrochemical engineers who must cope with rotation say that it can greatly increase the difficulties of sealing a joint. Some even say that rotations as small as 0.10 degrees can make a tight seal almost impossible. This is quite a bit stiffer than the preliminary proposed ASME limit of a maximum 0.30 degrees for integral type flanges or 0.20 degrees for loose type flanges.

FLANGE ROTATION AND THE CODE

Flange rotation is known to be important but there are no simple ways to estimate it. Section VIII of the ASME Code, Table UA-49.2 Effective Gasket Width acknowledges rotation by introducing an effective width for a gasket, which is equal to or less than half the width of the gasket or joint-contact-surface seating width. This allowance leakage assumes that at least half of the gasket will have been unloaded by rotation. But flanges often rotate more or less than this. Proper installation and bolt tightening procedures greatly reduce the chance for flange rotation.

EXCESSIVE BOLT LOAD

One of the causes of flange rotation is excessive bolt load. In fact, too much bolt load can rotate raised face flanges enough to open a leak path. The threat of rotation, therefore, can place an upper limit on planned or specific clamping force.

WARNING:
Properties/applications shown throughout this brochure are typical. Your specific application should not be under taken without independent study and evaluation for suitability. For specific application recommendations consult Garlock. Failure to select the proper sealing products could result in property damage and/or serious personal injury.
Performance data published in this brochure has been developed from field testing, customer field reports and/or in-house testing.
While the utmost care has been used in compiling this brochure, we assume no responsibility for errors. Specifications subject to change without notice. This edition cancels all previous issues. Subject to change without notice.

Troubleshooting Leaking Joints

One of the best methods for determining the cause of joint leakage is the careful examination of the gasket where the leakage occurred.

Observation	Possible Remedies
Gasket badly corroded	» Select replacement material with improved corrosion resistance
Gasket extruded excessively	» Select replacement material with better cold flow properties » Select replacement material with better load capacity - i.e., more dense
Gasket grossly crushed	» Select replacement material with better load carrying capacity » Provide means to prevent crushing the gasket by use of a stop ring or redesign of flanges
Gasket mechanically damaged due to overhang of raised face or flange bore	» Review gasket dimensions to insure gaskets are proper size » Make certain gaskets are properly centered in joint
No apparent gasket compression achieved	» Select softer gasket material » Select thicker gasket material » Reduce gasket area to allow higher unit seating load
Gasket substantially thinner on OD than ID due to excessive flange rotation or bending	» Alter gasket dimensions to move gasket reaction closer to bolts to minimize bending movement » Provide stiffness to flange by means of back-up rings » Select softer gasket material to lower required seating stresses » Reduce gasket area to lower seating stresses
Gasket unevenly compressed around circumference	» Make certain proper sequential bolt-up procedures are followed » Ensure flanges are properly aligned
Gasket thickness varies periodically around circumference	» Provide reinforcing rings for flanges to better distribute bolt load » Select gasket material with lower seating stress » Provide additional bolts if possible to obtain better load distribution » If flanges are warped, remachine or use softer gasket material



Gasket Installation

In a flanged connection, all components must be selected and installed correctly to achieve a seal. The most common cause of leaky gasketed joints is improper installation procedures.

A few simple steps must be followed during installation to ensure optimum performance:

1. Verify the flange faces are clean, free of debris/fluids, and in good working condition (flat, aligned, no major defects, etc.).
2. Check to ensure the facing on the metal core (kammprofiles or corrugate metal gaskets) and/or windings (spiral wound gaskets) are not damaged.
3. Center the gasket on the flange. This is extremely vital where raised faces are involved.
4. NOTE: When using spiral wound gaskets make sure the windings are fully contacted by the flange faces (especially at the ID). Failure to do so could result in windings being "sprung or buckled" when compression is applied.
5. Bolts/studs and nuts should be in good working order (ideally new) and turn together freely.
6. Bolt/stud threads should be lubricated with a good quality thread lubricant and installed with at least one hardened flat washer under each nut being turned to reduce friction and optimize load translation.
7. Finger-tighten and lightly snug all bolts/studs and nuts using a crossing pattern (see Figure 1) prior to beginning the torquing process.
8. Using a calibrated torque wrench, tighten the nuts in multiple steps using a crossing pattern (see Figure 1) to evenly compress the gasket.
9. Once the final torque is achieved make a final pass at the final torque moving consecutively from bolt to bolt (see Figure 2).
10. Retorque 12-24 hours after initial installation when possible (see Figure 2). For safety reasons, Garlock does not recommend retightening a flange connection once it is brought up to temperature and/or pressure. All applicable safety standards including lockout/tagout procedures should be observed.

NOTE: Never use liquid or metallic based anti-stick or lubricating compounds on the gaskets. Premature failure could occur as a result.

BOLTING PROCEDURES

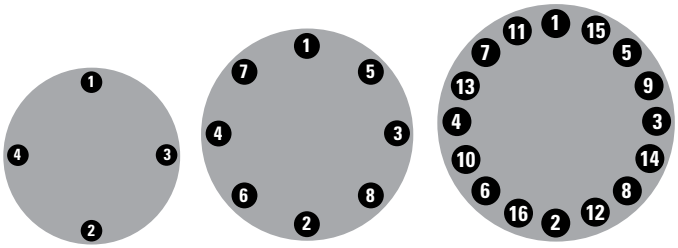

4-Bolt Flange 8-Bolt Flange 16-Bolt Flange

All applicable safety standards including lockout / tag out procedures should be practiced.

Torque Tables

These tables were developed to be used with Garlock metallic gaskets. They are to be used only as a general guide. They should not be considered to contain absolute values due to the large number of uncontrollable variables involved with bolted joints.

All bolt torque values are based upon the use of new nuts (ASTM A194, GR 2H) and new bolts (ASTM A193, GR B7) of proper design, acceptable quality and approved materials of construction as well as metallurgy. It is also recommended that two hardened steel washers be used under the head of each nut or turning surface (if tightening the bolt) and that a thread lubricant (i.e. oil and graphite) be used on the nuts, bolts and washers.

The flanges are assumed to be in good condition and in compliance with ASME B16.5 or B16.47 specifications. Special attention should be given to seating surface finish and flatness.

Only torque wrenches that have been calibrated should be used. The proper bolt tightening pattern must be followed, with the desired ultimate torque value arrived at in a minimum of three incremental steps. For example: (30 ft. lbs., 60 ft. lbs., 100 ft. lbs.) All bolts in the flange should then be checked in consecutive bolt-to-bolt order.

The torque values are based on actual contact dimension, which will vary depending on the gasket type.

No provisions have been made in these tables to account for vibration effects on the bolts. These tables are based on ambient conditions, without compensation for elevated temperatures.

Torque Tables

150# RAISED FACE FLANGES

			FLEXSEAL®		EDGE®		Kammprofile		CMG*	
Nominal Pipe Size (inches)	Number of Bolts	Size of Bolts	Minimum Torque (ft.lbs)	Preferred Torque (ft.lbs)	Minimum Torque (ft.lbs)	Preferred Torque (ft.lbs)	Minimum Torque (ft.lbs)	Preferred Torque (ft.lbs)	Minimum Torque (ft.lbs)	Preferred Torque (ft.lbs)
0.50	4	0.50	16	47	9	52	8	42	11	37
0.75	4	0.50	22	60	12	60	11	54	16	60
1	4	0.50	30	60	15	60	13	60	21	60
1.25	4	0.50	33	60	16	60	24	60	33	60
1.5	4	0.50	47	60	23	60	31	60	43	60
2	4	0.63	74	120	36	120	55	120	87	120
2.5	4	0.63	87	120	43	120	63	120	101	120
3	4	0.63	120	120	63	120	102	120	120	120
4	8	0.63	92	120	47	120	76	120	105	120
5	8	0.75	124	200	63	200	106	200	146	200
6	8	0.75	178	200	89	200	137	200	185	200
8	8	0.75	200	200	128	200	190	200	250	200
10	12	0.88	236	320	120	320	178	320	235	320
12	12	0.88	320	320	163	320	178	320	312	320
14	12	1.00	408	490	209	490	268	490	396	490
16	16	1.00	421	490	210	490	267	490	377	490
18	16	1.13	649	710	328	710	381	710	560	710
20	20	1.13	572	710	289	710	335	710	494	710
24	20	1.25	820	1000	415	1000	438	1000	704	1000

*Includes GRAPHONIC®, G.E.T™ and TEPHONIC™

Based on ASTM A193 B7 bolts - 60,000 psi maximum bolt stress

300# RAISED FACE FLANGES

			FLEXSEAL®		EDGE®		Kammprofile		CMG*	
Nominal Pipe Size (inches)	Number of Bolts	Size of Bolts	Minimum Torque (ft.lbs)	Preferred Torque (ft.lbs)	Minimum Torque (ft.lbs)	Preferred Torque (ft.lbs)	Minimum Torque (ft.lbs)	Preferred Torque (ft.lbs)	Minimum Torque (ft.lbs)	Preferred Torque (ft.lbs)
0.50	4	0.50	16	47	9	52	8	42	11	37
0.75	4	0.63	28	84	15	88	14	68	20	67
1	4	0.63	38	114	19	115	17	84	27	89
1.25	4	0.63	41	120	20	120	30	120	41	120
1.5	4	0.75	66	198	32	191	43	200	60	200
2	8	0.63	37	112	18	109	27	120	43	120
2.5	8	0.75	48	145	24	144	35	177	56	188
3	8	0.75	71	200	35	200	57	200	83	200
4	8	0.75	103	200	52	200	84	200	117	200
5	8	0.75	124	200	63	200	106	200	146	200
6	12	0.75	118	200	60	200	92	200	123	200
8	12	0.88	194	320	98	320	146	320	192	320
10	16	1.00	206	490	105	490	155	490	205	490
12	16	1.13	309	710	156	710	171	710	299	710
14	20	1.13	269	710	138	710	177	710	261	710
16	20	1.25	399	1000	203	1000	259	1000	365	1000
18	24	1.25	478	1000	241	1000	280	1000	412	1000
20	24	1.25	526	1000	266	1000	308	1000	454	1000
24	24	1.50	723	1600	366	1600	386	1600	621	1600

*Includes GRAPHONIC®, G.E.T™ and TEPHONIC™

Based on ASTM A193 B7 bolts - 60,000 psi maximum bolt stress

Torque Tables

400# RAISED FACE FLANGES

			FLEXSEAL®		EDGE®		Kammprofile		CMG*	
Nominal Pipe Size (inches)	Number of Bolts	Size of Bolts	Minimum Torque (ft.lbs)	Preferred Torque (ft.lbs)	Minimum Torque (ft.lbs)	Preferred Torque (ft.lbs)	Minimum Torque (ft.lbs)	Preferred Torque (ft.lbs)	Minimum Torque (ft.lbs)	Preferred Torque (ft.lbs)
0.50	4	0.50	16	47	17	52	8	42	Contact Engineering	
0.75	4	0.63	28	84	29	88	14	68		
1	4	0.63	38	114	38	115	17	84		
1.25	4	0.63	41	120	40	120	30	120		
1.5	4	0.75	66	198	64	191	43	200		
2	8	0.63	37	112	36	109	27	120		
2.5	8	0.75	48	145	48	144	35	177		
3	8	0.75	71	200	71	200	57	200		
4	8	0.88	149	320	120	320	97	320		
5	8	0.88	190	320	146	320	123	320		
6	12	0.88	173	320	138	320	106	320		
8	12	1.00	280	490	22-	490	170	490		
10	16	1.13	314	710	230	691	170	710		
12	16	1.25	456	1000	345	1000	188	941		
14	20	1.25	373	1000	304	911	195	975		
16	20	1.38	532	1630	445	1335	283	1360		
18	24	1.38	567	1360	527	1360	306	1360		
20	24	1.50	604	1600	563	1600	326	1600		
24	24	1.75	962	2887	975	2924	513	2566		

*Includes GRAPHONIC®, G.E.T™ and TEPHONIC™

Based on ASTM A193 B7 bolts - 60,000 psi maximum bolt stress

600# RAISED FACE FLANGES

			FLEXSEAL®		EDGE®		Kammprofile		CMG*	
Nominal Pipe Size (inches)	Number of Bolts	Size of Bolts	Minimum Torque (ft.lbs)	Preferred Torque (ft.lbs)	Minimum Torque (ft.lbs)	Preferred Torque (ft.lbs)	Minimum Torque (ft.lbs)	Preferred Torque (ft.lbs)	Minimum Torque (ft.lbs)	Preferred Torque (ft.lbs)
0.50	4	0.50	16	47	17	52	8	42	Contact Engineering	
0.75	4	0.63	28	84	29	88	14	68		
1	4	0.63	38	114	38	115	17	84		
1.25	4	0.63	41	120	40	120	30	120		
1.5	4	0.75	66	198	64	191	43	200		
2	8	0.63	37	112	36	109	27	120		
2.5	8	0.75	48	145	48	144	35	177		
3	8	0.75	71	200	71	200	57	200		
4	8	0.88	149	320	120	320	97	320		
5	8	1.00	221	490	170	490	143	490		
6	12	1.00	202	490	160	480	123	490		
8	12	1.13	307	710	241	710	187	710		
10	16	1.25	346	1000	254	763	188	938		
12	20	1.25	365	1000	276	829	151	753		
14	20	1.38	408	1224	332	996	213	1066		
16	20	1.50	514	1543	430	1291	274	1370		
18	20	1.63	757	2200	704	2112	409	2044		
20	24	1.63	695	2085	647	1941	375	1875		
24	24	1.88	1103	3308	1117	3350	588	2940		

*Includes GRAPHONIC®, G.E.T™ and TEPHONIC™

Based on ASTM A193 B7 bolts - 60,000 psi maximum bolt stress

Torque Tables

900# RAISED FACE FLANGES

Nominal Pipe Size (inches)	Number of Bolts	Size of Bolts	FLEXSEAL® Minimum Torque (ft.lbs)	FLEXSEAL® Preferred Torque (ft.lbs)	EDGE® Minimum Torque (ft.lbs)	EDGE® Preferred Torque (ft.lbs)	Kammprofile Minimum Torque (ft.lbs)	Kammprofile Preferred Torque (ft.lbs)	CMG* Minimum Torque (ft.lbs)	CMG* Preferred Torque (ft.lbs)
0.50	4	0.75	22	100	24	100	12	100	Contact Engineering	
0.75	4	0.75	31	100	33	100	15	100		
1	4	0.88	49	160	49	160	22	160		
1.25	4	0.88	53	160	52	160	39	193		
1.5	4	1.00	89	266	85	256	58	289		
2	8	0.88	48	160	47	160	35	176		
2.5	8	1.00	65	245	65	245	47	245		
3	8	0.88	106	319	81	244	66	328		
4	8	1.13	191	572	153	458	124	622		
5	8	1.25	268	804	206	617	173	865		
6	12	1.13	221	664	176	527	135	675		
8	12	1.38	333	1000	303	909	225	1127		
10	16	1.38	306	919	278	835	205	1026		
12	20	1.38	368	1103	302	907	165	824		
14	20	1.50	388	1164	321	963	206	1031		
16	20	1.63	514	1541	495	1485	315	1575		
18	20	1.88	991	2972	933	2800	542	2710		
20	20	2.00	934	2802	984	2952	540	2850		
24	20	2.50	1382	4400	1582	4747	833	4400		

*Includes GRAPHONIC®, G.E.T™ and TEPHONIC™

Based on ASTM A193 B7 bolts - 60,000 psi maximum bolt stress

1500# RAISED FACE FLANGES

Nominal Pipe Size (inches)	Number of Bolts	Size of Bolts	FLEXSEAL® Minimum Torque (ft.lbs)	FLEXSEAL® Preferred Torque (ft.lbs)	EDGE® Minimum Torque (ft.lbs)	EDGE® Preferred Torque (ft.lbs)	Kammprofile Minimum Torque (ft.lbs)	Kammprofile Preferred Torque (ft.lbs)	CMG* Minimum Torque (ft.lbs)	CMG* Preferred Torque (ft.lbs)
0.50	4	0.75	22	100	24	100	20	100	Contact Engineering	
0.75	4	0.75	31	100	33	100	25	100		
1	4	0.88	49	160	49	160	36	160		
1.25	4	0.88	80	240	52	160	64	193		
1.5	4	1.00	118	353	85	256	96	289		
2	8	0.88	76	227	47	160	59	176		
2.5	8	1.00	108	325	65	245	79	245		
3	8	1.13	150	451	104	355	140	419		
4	8	1.25	231	694	169	506	229	686		
5	8	1.50	323	970	218	800	305	915		
6	12	1.38	289	867	212	680	272	815		
8	12	1.63	432	1297	337	1100	418	1253		
10	12	1.88	754	2262	547	2000	673	2018		
12	16	2.00	647	2200	532	2200	484	2200		
14	16	2.25	684	3180	655	3180	701	3180		
16	16	2.50	1141	4400	969	4400	1027	4400		
18	16	2.75	1606	5920	1513	5920	1464	5920		
20	16	3.00	1921	7720	1810	7720	1748	7720		
24	16	3.50	3100	13000	2867	13000	2516	13000		

*Includes GRAPHONIC®, G.E.T™ and TEPHONIC™

Based on ASTM A193 B7 bolts - 60,000 psi maximum bolt stress

Torque Tables

2500# RAISED FACE FLANGES

Nominal Pipe Size (inches)	Number of Bolts	Size of Bolts	FLEXSEAL® Minimum Torque (ft.lbs)	FLEXSEAL® Preferred Torque (ft.lbs)	EDGE® Minimum Torque (ft.lbs)	EDGE® Preferred Torque (ft.lbs)	Kammprofile Minimum Torque (ft.lbs)	Kammprofile Preferred Torque (ft.lbs)	CMG* Minimum Torque (ft.lbs)	CMG* Preferred Torque (ft.lbs)
0.50	4	0.75	22	100	24	100	20	100	Contact Engineering	
0.75	4	0.75	31	100	33	100	25	100		
1	4	0.88	49	160	49	160	36	160		
1.25	4	1.00	93	279	60	245	75	245		
1.5	4	1.13	129	387	94	355	106	355		
2	8	1.00	88	264	55	245	68	245		
2.5	8	1.13	119	357	71	355	87	355		
3	8	1.25	166	500	115	500	154	500		
4	8	1.50	245	800	178	800	242	800		
5	8	1.75	430	1500	289	1500	406	1500		
6	8	2.00	611	2200	448	2200	574	2200		
8	12	2.00	548	2200	427	2200	529	2200		
10	12	2.50	831	4400	646	4400	794	4400		
12	12	2.75	1326	5920	963	5920	875	5920		

*Includes GRAPHONIC®, G.E.T™ and TEPHONIC™

Based on ASTM A193 B7 bolts - 60,000 psi maximum bolt stress

WARNING:

Properties/applications shown throughout this brochure are typical. Your specific application should not be undertaken without independent study and evaluation for suitability. For specific application recommendations consult Garlock. Failure to select the proper sealing products could result in property damage and/or serious personal injury.

Performance data published in this brochure has been developed from field testing, customer field reports and/or in-house testing.

While the utmost care has been used in compiling this brochure, we assume no responsibility for errors. Specifications subject to change without notice. This edition cancels all previous issues. Subject to change without notice.

Torque to Stress Studs/Bolts

The torque required to produce a certain stress in bolting is dependent on several conditions, including:

» Bolt diameter and thread pitch
» Condition of nut bearing or turning surfaces
» Lubrication of threads and nut bearing surfaces.

The tables below reflect the results of many tests to determine the relation between torque and bolt stress. Values are based on steel studs/bolts that have been well-lubricated with a heavy graphite and oil mixture.

A non-lubricated stud/bolt has an efficiency of about 50% of a well-lubricated bolt. Also, different lubricants produce results that vary from 50% to 100% of the tabulated stress figures.

FOR ALLOY STEEL STUD BOLTS (LOAD IN POUNDS ON STUD BOLTS WHEN TORQUE LOAD IS APPLIED) (UN8)*

Nominal Diameter of Bolt (inches)	Number of Threads (per inch)	Diameter at Root of Thread (inches)	Area at Root of Thread (sq. inch)	Stress					
				30,000 psi		45,000 psi		60,000 psi	
				Torque (ft lbs)	Compression (lbs)	Torque (ft lbs)	Compression (lbs)	Torque (ft lbs)	Compression (lbs)
1/4	20	0.185	0.027	4	810	6	1,215	8	1,620
5/16	18	0.240	0.045	8	1,350	12	2,025	16	2,700
3/8	16	0.294	0.068	12	2,040	18	3,060	24	4,080
7/16	14	0.345	0.093	20	2,790	30	4,185	40	5,580
1/2	13	0.400	0.126	30	3,780	45	5,670	60	7,560
9/16	12	0.454	0.162	45	4,860	68	7,290	90	9,720
5/8	11	0.507	0.202	60	6,060	90	9,090	120	12,120
3/4	10	0.620	0.302	100	9,060	150	13,590	200	18,120
7/8	9	0.731	0.419	160	12,570	240	18,855	320	25,140
1	8	0.838	0.551	245	16,530	368	24,795	490	33,060
1-1/8	8	0.963	0.728	355	21,840	533	32,760	710	43,680
1-1/4	8	1.088	0.929	500	27,870	750	41,805	1,000	55,740
1-3/8	8	1.213	1.155	680	34,650	1,020	51,975	1,360	69,300
1-1/2	8	1.338	1.405	800	42,150	1,200	63,225	1,600	84,300
1-5/8	8	1.463	1.680	1,100	50,400	1,650	75,600	2,200	100,800
1-3/4	8	1.588	1.980	1,500	59,400	2,250	89,100	3,000	118,800
1-7/8	8	1.713	2.304	2,000	69,120	3,000	103,680	4,000	138,240
2	8	1.838	2.652	2,200	79,560	3,300	119,340	4,400	159,120
2-1/4	8	2.088	3.423	3,180	102,690	4,770	154,035	6,360	205,380
2-1/2	8	2.338	4.292	4,400	128,760	6,600	193,140	8,800	257,520
2-3/4	8	2.588	5.259	5,920	157,770	8,880	236,655	11,840	315,540
3	8	2.838	6.324	7,720	189,720	11,580	264,580	15,440	379,440

FOR MACHINE BOLTS AND COLD ROLLED STEEL STUD BOLTS (LOAD IN POUNDS ON STUD BOLTS WHEN TORQUE LOAD IS APPLIED) (UNC)

Nominal Diameter of Bolt (inches)	Number of Threads (per inch)	Diameter at Root of Thread (inches)	Area at Root of Thread (sq. inch)	Stress					
				7,500 psi		15,000 psi		30,000 psi	
				Torque (ft lbs)	Compression (lbs)	Torque (ft lbs)	Compression (lbs)	Torque (ft lbs)	Compression (lbs)
1/4	20	0.185	0.027	1	203	2	405	4	810
5/16	18	0.240	0.045	2	338	4	675	8	1,350
3/8	16	0.294	0.068	3	510	6	1,020	12	2,040
7/16	14	0.345	0.093	5	698	10	1,395	20	2,790
1/2	13	0.400	0.126	8	945	15	1,890	30	3,780
9/16	12	0.454	0.162	12	1,215	23	2,340	45	4,860
5/8	11	0.507	0.202	15	1,515	30	3,030	60	6,060
3/4	10	0.620	0.302	25	2,265	50	4,530	100	9,060
7/8	9	0.731	0.419	40	3,143	80	6,285	160	12,570
1	8	0.838	0.551	62	4,133	123	8,265	245	16,530
1-1/8	7	0.969	0.693	98	5,190	195	10,380	390	20,760
1-1/4	7	1.064	0.890	137	6,675	273	13,350	545	26,700
1-3/8	6	1.158	1.054	183	7,905	365	15,810	730	31.620
1-1/2	6	1.283	1.294	219	9,705	437	19,410	875	38,820
1-5/8	5-1/2	1.389	1.515	300	11,363	600	22,725	1,200	45,450
1-3/4	5	1.490	1.744	390	13,080	775	26,160	1,550	52,320
1-7/8	5	1.615	2.049	525	15,368	1,050	30,735	2,100	61,470
2	4-1/2	1.711	2.300	563	17,250	1,125	34,500	2,250	69,000

* UN8 (8 thread series) is the standard for ASTM A193 B7, A193 B8, B8M and A320 bolts and studs

Ordering Guide

RW, RWI SPIRAL WOUND

When ordering, specify:

- Nominal pipe size or gasket dimensions, and pressure class
- Winding and filler materials
- Centering and/or inner compression ring material

SW, SWI SPIRAL WOUND

When ordering, specify:

- OD and ID dimensions (and tolerance, if other than standard—see page 16)
- Thickness of gasket
- Winding and filler material
- Inner ring material, if required (Style SWI)
- Pressure rating

CUSTOM GASKETS

A spiral wound gasket can be made to almost any dimension required. Possible designs include multiple windings and rings, with combinations of different fillers or special winding materials. Describe your application or send us a drawing and we'll help you design the appropriate winding.

HEAT EXCHANGER

The size restrictions for heat exchanger gaskets depend only on the available sizes of the materials. Heat exchanger gaskets are commonly made in diameters up to 120", with rib widths up to 1-1/4" and thicknesses up to 1/4".

When ordering, specify:

- Style number
- Shape
- Thickness
- Material (metal or metal and filler)

Plus specify (according to diagram below):

1. Outside diameter
2. Inside diameter
3. Rib width
4. Radii on ribs, at rib intersect points and around bolt holes
5. Bolt circle diameter
6. Distance from center line of gasket to center line of ribs
7. Size and number of bolt holes
8. Hole placement relative to center line of gasket

NOTE:
In addition to the above information, drawings of your application are always helpful in proper dimensioning of gaskets.

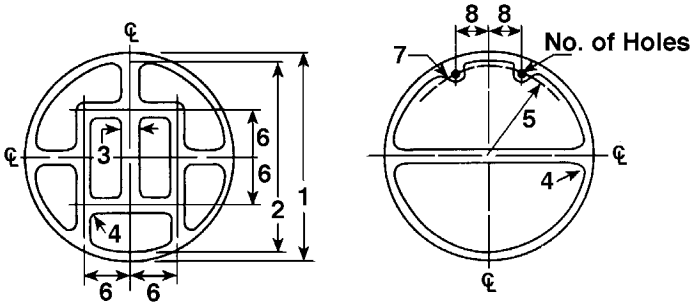

WARNING:

Properties/applications shown throughout this brochure are typical. Your specific application should not be undertaken without independent study and evaluation for suitability. For specific application recommendations consult Garlock. Failure to select the proper sealing products could result in property damage and/or serious personal injury.

Performance data published in this brochure has been developed from field testing, customer field reports and/or in-house testing.

While the utmost care has been used in compiling this brochure, we assume no responsibility for errors. Specifications subject to change without notice. This edition cancels all previous issues. Subject to change without notice.

Storage Instructions & Shelf Life

1. Store in a cool, dry area.
2. Do not fold or bend.
3. If exposed to greases, oils, or solvents in liquid or vapor form, clean before installing.
4. Following extended storage, carefully inspect the material for damage.
5. Store horizontal to avoid imparting tension or warping (especially spiral wound gaskets).
6. Protect the sealing faces to avoid damage.
7. If in doubt concerning any of the above provisions, consult applications Engineering at 800-448-6688.

Shelf life for all FLEXSEAL® containing Graphite or PTFE, and is indefinite based on ideal storage conditions.

Shelf life for metal gaskets with facing material bonded to the metal substrate with adhesive (KAMMPROFILE, GRAPHONIC®, TEPHONIC®, G.E.T., THERMa-PUR® CMG, etc.) and any gasket containing THERMa-PUR® or compressed fiber is 5 years based on ideal storage conditions.

Conversions

COMMON ABBREVIATIONS

SI - International Metric Standard
Pa - Pascal
psi - pounds per square inch
psig - pounds per square inch gauge
oz - ounce
g - gram
lbf - pound force
kgf - kilogram force
N - Newton
in - inch
ft - foot
yd - yard
m - meter
gal - gallon
l - liter

PREFIXES

M (mega)	= 1,000,000	= 10^6
k (kilo)	= 1,000	= 10^3
c (centi)	= 0.01	= 10^{-2}
m (milli)	= 0.001	= 10^{-3}
u (micro)	= 0.000001	= 10^{-6}

METRIC CONVERSIONS

Conversion from:	To SI units:	Multiply by:
	Length	
mil	mm	0.0254
in	mm	25.4
in	cm	2.54
ft	m	0.3048
yd	m	0.9144
	Weight	
oz	g	28.35
oz	kg	0.0283
lb	g	453.6
lb	kg	0.4536
lb	N	4.4482
	Force	
lbf	N	4.448
kgf	N	9.8066
	Area	
in^2	cm^2	6.4516
ft^2	m^2	0.0929
	Pressure	
bar	psi	14.5
psi	Pa	6895
psi	kPa	6.89
psi	bar	0.069
psi	MPa	0.0069
N/m^2	Pa	1.00
N/mm^2	MPa	1.00
	Torque	
in-lb	Nm	0.113
ft/lb	Nm	1.3558
	Density	
oz/in^3	g/cm^3	1.73
g/cm^3	kg/m^3	1000
lb/ft^3	kg/m^3	16.02
lb/ft^3	g/cm^3	0.01602
	Adhesion	
lb/in	kN.m	0.1751
	Volume	
gal	l	3.7854
gal	m^3	0.0038

Maximum Flange Bore for FLEXSEAL® RW/RWI

Per ASME B16.20 Table SW-2.5-2

<table>
<tr><th rowspan="2">Flange Size (NPS)</th><th colspan="8">Pressure Class</th></tr>
<tr><th>75#</th><th>150#</th><th>300#</th><th>400#</th><th>600#</th><th>900[1]#</th><th>1500[1]#</th><th>2500[1]#</th></tr>
<tr><td>½"</td><td rowspan="15">No flanges</td><td colspan="2" rowspan="3">Weld-neck only[2]</td><td rowspan="6">No flanges, use class 600</td><td>Weld-neck only[2]</td><td rowspan="6">No flanges, use class 1500</td><td colspan="2" rowspan="5">Weld-neck only[2]</td></tr>
<tr><td>¾"</td><td>Weld-neck only[2]</td></tr>
<tr><td>1"</td><td>Weld-neck only[2]</td></tr>
<tr><td>1¼"</td><td colspan="2" rowspan="2">Slip-on[3] Weld-neck[2]</td><td>Slip-on[3] Weld-neck[2]</td></tr>
<tr><td>1½"</td><td>Slip-on[3] Weld-neck[2]</td></tr>
<tr><td>2"</td><td colspan="2" rowspan="2">Slip-on3 Weld-neck, any bore</td><td>Slip-on[3] Weld-neck, any bore</td></tr>
<tr><td>2½"</td><td>Slip-on[3] Weld-neck, any bore</td></tr>
<tr><td>3"</td><td rowspan="13">Slip-on, Weld-neck, any bore</td><td>Slip-on, Weld-neck any bore</td><td rowspan="2"></td><td colspan="2" rowspan="3">Weld-neck with standard wall bore (includes nozzle[4] but excludes slip-on)</td></tr>
<tr><td>4"</td><td colspan="3" rowspan="4">Weld-neck with schedule 10S bore described in ASME B36.19M (includes nozzle[4] but excludes slip-on)</td></tr>
<tr><td>6"</td></tr>
<tr><td>8"</td><td rowspan="2">Weld-neck w/ schedule 60 bore</td></tr>
<tr><td>10"</td><td rowspan="2">Weld-neck w/ schedule 80 bore</td></tr>
<tr><td>12"</td><td rowspan="4">Weld-neck with schedule 10 bore described in ASME B36.10M (excludes nozzle[4] and slip-on[5])</td><td rowspan="3">Weld-neck w/ standard wall bore (excludes nozzle and slip-on)</td></tr>
<tr><td>14"</td><td rowspan="4">No flanges</td></tr>
<tr><td>16"</td></tr>
<tr><td>18"</td></tr>
<tr><td>20"</td><td rowspan="2">Weld-neck w/ sched. 40 bore</td></tr>
<tr><td>24"</td></tr>
</table>

NOTES:

1. Inner rings are recommended for all graphite filled gaskets, required for all PTFE filled gaskets, and for NPS 24 and larger in Class 900#, NPS 12 and larger in Class 1500#, and NPS 4 and larger in Class 2500#. (See page 5 for full description) These inner rings may extend into the pipe bore a maximum of 0.06" (1.5 mm) under the worst combination or maximum bore, eccentric installation, and additive tolerances. Purchaser should specify inner ring material.
2. In these sizes the gasket is suitable for a weld-neck flange with a standard wall bore, if the gasket and the flange are assembled concentrically. This also applies to a nozzle. It is the user's responsibility to determine if the gasket is satisfactory for the flange of any larger bore.
3. Gaskets in these sizes are suitable for slip-on flanges only if the gaskets and flanges are assembled concentrically.
4. A nozzle is a long welded neck; the bore equals the flange NPS.
5. An NPS 24 gasket is suitable for nozzles.

WARNING:

Properties/applications shown throughout this brochure are typical. Your specific application should not be undertaken without independent study and evaluation for suitability. For specific application recommendations consult Garlock. Failure to select the proper sealing products could result in property damage and/or serious personal injury.

Performance data published in this brochure has been developed from field testing, customer field reports and/or in-house testing.

While the utmost care has been used in compiling this brochure, we assume no responsibility for errors. Specifications subject to change without notice. This edition cancels all previous issues. Subject to change without notice.

Styles RW, RWI Dimensions ¼" to 24" Flanges

ASME B16.20 GASKETS FOR ASME B16.5 FLANGES

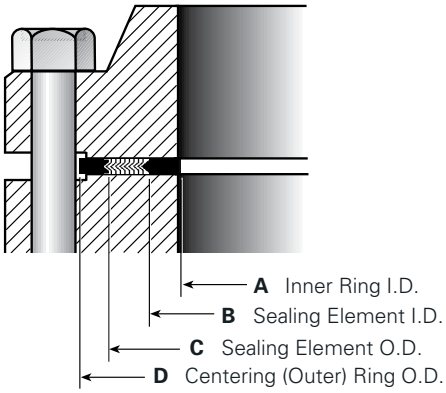

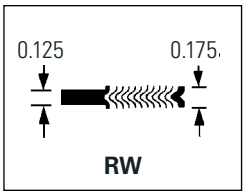

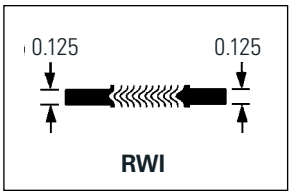

150#

Size NPS	Inner Ring[1]	Sealing Element		Outer Ring
	Inside (A) Diameter	Inside (B) Diameter	Outside (C) Diameter	Outside (D) Diameter
1/4*	—	0.50	0.88	1.75
1/2	0.56	0.75	1.25	1.88
3/4	0.81	1.00	1.56	2.25
1	1.06	1.25	1.88	2.63
1-1/4	1.50	1.88	2.38	3.00
1-1/2	1.75	2.13	2.75	3.38
2	2.19	2.75	3.38	4.13
2-1/2	2.62	3.25	3.88	4.88
3	3.19	4.00	4.75	5.38
3-1/2*	—	4.50	5.25	6.38
4	4.19	5.00	5.88	6.88
4-1/2*	—	5.50	6.50	7.00
5	5.19	6.13	7.00	7.75
6	6.19	7.19	8.25	8.75
8	8.50	9.19	10.38	11.00
10	10.56	11.31	12.50	13.38
12	12.50	13.38	14.75	16.13
14	13.75	14.63	16.00	17.75
16	15.75	16.63	18.25	20.25
18	17.69	18.69	20.75	21.63
20	19.69	20.69	22.75	23.88
24	23.75	24.75	27.00	28.25

* ASME B16.20 does not include dimensions for NPS 1/4, 3-1/2 or 4-1/2, or Class 400 flanges up to NPS 3 and Class 900 flanges up to NPS 2-1/2. Dimensions in inches.

300#

Size NPS	Inner Ring[1]	Sealing Element		Outer Ring
	Inside (A) Diameter	Inside (B) Diameter	Outside (C) Diameter	Outside (D) Diameter
1/4*	—	0.50	0.88	1.75
1/2	0.56	0.75	1.25	2.13
3/4	0.81	1.00	1.56	2.63
1	1.06	1.25	1.88	2.88
1-1/4	1.50	1.88	2.38	3.25
1-1/2	1.75	2.13	2.75	3.75
2	2.19	2.75	3.38	4.38
2-1/2	2.62	3.25	3.88	5.13
3	3.19	4.00	4.75	5.88
3-1/2*	—	4.50	5.25	6.50
4	4.19	5.00	5.88	7.13
4-1/2*	—	5.50	6.50	7.75
5	5.19	6.13	7.00	8.50
6	6.19	7.19	8.25	9.88
8	8.50	9.19	10.38	12.13
10	10.56	11.31	12.50	14.25
12	12.50	13.38	14.75	16.63
14	13.75	14.63	16.00	19.13
16	15.75	16.63	18.25	21.25
18	17.69	18.69	20.75	23.50
20	19.69	20.69	22.75	25.75
24	23.75	24.75	27.00	30.50

NOTES:

1. Inner rings are recommended for all graphite filled gaskets, required for all PTFE filled gaskets, and for NPS 24 and larger in Class 900#, NPS 12 and larger in Class 1500#, and NPS 4 and larger in Class 2500#.
2. The gasket outside Diameter tolerance for NPS 1/2 through NPS 8 is ±0.03"; for NPS 10 through NPS 24, +0.06", –0.03".
3. The gasket inside Diameter tolerance for NPS 1/2 through NPS 8 is ±0.016"; for NPS 10 through NPS 24, ±0.03".

Styles RW, RWI Dimensions ¼" to 24" Flanges

400#

Size NPS	Inner Ring[1]	Sealing Element		Outer Ring
	Inside (A) Diameter	Inside (B) Diameter	Outside (C) Diameter	Outside (D) Diameter
1/4*	—	0.50	0.88	1.75
1/2	—	0.75	1.25	2.13
3/4	—	1.00	1.56	2.63
1	—	1.25	1.88	2.88
1-1/4	—	1.88	2.38	3.25
1-1/2	—	2.13	2.75	3.75
2	—	2.75	3.38	4.38
2-1/2	—	3.25	3.88	5.13
3	—	4.00	4.75	5.88
3-1/2*	—	4.13	5.25	6.38
4	4.04	4.75	5.88	7.00
4-1/2*	—	5.31	6.50	7.63
5	5.05	5.81	7.00	8.38
6	6.10	6.88	8.25	9.75
8	8.10	8.88	10.38	12.13
10	10.05	10.81	12.50	14.13
12	12.10	12.88	14.75	16.50
14	13.50	14.25	16.00	19.00
16	15.35	16.25	18.25	21.13
18	17.25	18.50	20.75	23.38
20	19.25	20.50	22.75	25.50
24	23.25	24.75	27.00	30.25

600#

Size NPS	Inner Ring[1]	Sealing Element		Outer Ring
	Inside (A) Diameter	Inside (B) Diameter	Outside (C) Diameter	Outside (D) Diameter
1/4*	—	0.50	0.88	1.75
1/2	0.56	0.75	1.25	2.13
3/4	0.81	1.00	1.56	2.63
1	1.06	1.25	1.88	2.88
1-1/4	1.50	1.88	2.38	3.25
1-1/2	1.75	2.13	2.75	3.75
2	2.19	2.75	3.38	4.38
2-1/2	2.62	3.25	3.88	5.13
3	3.19	4.00	4.75	5.88
3-1/2*	—	4.13	5.25	6.38
4	4.04	4.75	5.88	7.63
4-1/2*	—	5.31	6.50	8.25
5	5.05	5.81	7.00	9.50
6	6.10	6.88	8.25	10.50
8	8.10	8.88	10.38	12.63
10	10.05	10.81	12.50	15.75
12	12.10	12.88	14.75	18.00
14	13.50	14.25	16.00	19.38
16	15.35	16.25	18.25	22.25
18	17.25	18.50	20.75	24.13
20	19.25	20.50	22.75	26.88
24	23.25	24.75	27.00	31.13

* ASME B16.20 does not include dimensions for NPS 1/4, 3-1/2 or 4-1/2, or Class 400# flanges up to NPS 3 and Class 900# flanges up to NPS 2-1/2. Dimensions in inches.

NOTES:

1. Inner rings are recommended for all graphite filled gaskets, required for all PTFE filled gaskets, and for NPS 24 and larger in Class 900#, NPS 12 and larger in Class 1500#, and NPS 4 and larger in Class 2500#.
2. The gasket outside Diameter tolerance for NPS 1/2 through NPS 8 is ±0.03"; for NPS 10 through NPS 24, +0.06", –0.03".
3. The gasket inside Diameter tolerance for NPS 1/2 through NPS 8 is ±0.016"; for NPS 10 through NPS 24, ±0.03".
4. The Inner Ring inside diameter shown for NPS 1-1/4" through 2-1/2" in 1500# & 2500# class flanges will produce an inner ring width of 0.12", a practical minimum for production purposes.
5. There are no Class 400# flanges in NPS 1/2 through NPS 3 (use Class 600), Class 900# flanges in NPS 1/2 through NPS 2-1/2 (use Class 1500#), or Class 2500# flanges NPS 14 and larger.

Styles RW, RWI Dimensions ¼" to 24" Flanges

900#

Size NPS	Inner Ring[1]	Sealing Element		Outer Ring
	Inside (A) Diameter	Inside (B) Diameter	Outside (C) Diameter	Outside (D) Diameter
1/2*	—	0.75	1.25	2.50
3/4*	—	1.00	1.56	2.75
1*	—	1.25	1.88	3.13
1-1/4*	—	1.56	2.38	3.50
1-1/2*	—	1.88	2.75	3.88
2*	—	2.31	3.38	5.63
2-1/2*	—	2.75	3.88	6.50
3	3.10	3.75	4.75	6.63
3-1/2*	—	4.13	5.25	7.50
4	4.04	4.75	5.88	8.13
4-1/2*	—	5.31	6.50	9.38
5	5.05	5.81	7.00	9.75
6	6.10	6.88	8.25	11.38
8	7.75	8.75	10.13	14.13
10	9.69	10.88	12.25	17.13
12	11.50	12.75	14.50	19.63
14	12.63	14.00	15.75	20.50
16	14.75	16.25	18.00	22.63
18	16.75	18.25	20.50	25.13
20	19.00	20.50	22.50	27.50
24	23.25	24.75	26.75	33.00

1500#

Size NPS	Inner Ring[1]	Sealing Element		Outer Ring
	Inside (A) Diameter	Inside (B) Diameter	Outside (C) Diameter	Outside (D) Diameter
1/2	0.56	0.75	1.25	2.50
3/4	0.81	1.00	1.56	2.75
1	1.06	1.25	1.88	3.13
1-1/4	1.31	1.56	2.38	3.50
1-1/2	1.63	1.88	2.75	3.88
2	2.06	2.31	3.38	5.63
2-1/2	2.50	2.75	3.88	6.50
3	3.10	3.63	4.75	6.88
3-1/2*	—	4.13	5.25	7.38
4	3.85	4.63	5.88	8.25
4-1/2*	—	5.31	6.50	9.13
5	4.90	5.63	7.00	10.00
6	5.80	6.75	8.25	11.13
8	7.75	8.50	10.13	13.88
10	9.69	10.50	12.25	17.13
12	11.50	12.75	14.50	20.50
14	12.63	14.25	15.75	22.75
16	14.50	16.00	18.00	25.25
18	16.75	18.25	20.50	27.75
20	18.75	20.50	22.50	29.75
24	22.75	24.25	26.75	35.50

2500#

Size NPS	Inner Ring[1]	Sealing Element		Outer Ring
	Inside (A) Diameter	Inside (B) Diameter	Outside (C) Diameter	Outside (D) Diameter
1/2	0.56	0.75	1.25	2.75
3/4	0.81	1.00	1.56	3.00
1	1.06	1.25	1.88	3.38
1-1/4	1.31	1.56	2.38	4.13
1-1/2	1.63	1.88	2.75	4.63
2	2.06	2.31	3.38	5.75
2-1/2	2.50	2.75	3.88	6.63
3	3.10	3.63	4.75	7.75
4	3.85	4.63	5.88	9.25
5	4.90	5.63	7.00	11.00
6	5.80	6.75	8.25	12.50
8	7.75	8.50	10.13	15.25
10	9.69	10.63	12.25	18.75
12	11.50	12.50	14.50	21.63

* ASME B16.20 does not include dimensions for NPS 1/4, 3-1/2 or 4-1/2, or Class 400# flanges up to NPS 3 and Class 900# flanges up to NPS 2-1/2. Dimensions in inches.

WARNING:
Properties/applications shown throughout this brochure are typical. Your specific application should not be undertaken without independent study and evaluation for suitability. For specific application recommendations consult Garlock. Failure to select the proper sealing products could result in property damage and/or serious personal injury.

Performance data published in this brochure has been developed from field testing, customer field reports and/or in-house testing.

While the utmost care has been used in compiling this brochure, we assume no responsibility for errors. Specifications subject to change without notice. This edition cancels all previous issues. Subject to change without notice.

Styles RW, RWI Dimensions 22" to 60" Series A Flanges

ASME B16.20 GASKETS FOR ASME B16.47 SERIES A FLANGES (MSS SP-44)

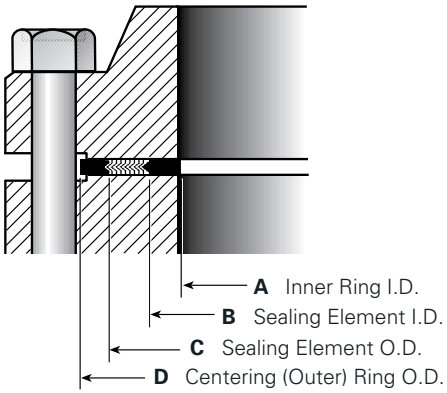

300#

Size NPS	Inner Ring[1]	Sealing Element		Outer Ring
	Inside (A) Diameter	Inside (B) Diameter	Outside (C) Diameter	Outside (D) Diameter
22*	—	22.75	24.75	27.75
26	25.75	27.00	29.00	32.88
28	27.75	29.00	31.00	35.38
30	29.75	31.25	33.25	37.50
32	31.75	33.50	35.50	39.63
34	33.75	35.50	37.50	41.63
36	35.75	37.63	39.63	44.00
38	37.50	38.50	40.00	41.50
40	39.50	40.25	42.13	43.88
42	41.50	42.25	44.13	45.88
44	43.50	44.50	46.50	48.00
46	45.38	46.38	48.38	50.13
48	47.63	48.63	50.63	52.13
50	49.00	51.00	53.00	54.25
52	52.00	53.00	55.00	56.25
54	53.25	55.25	57.25	58.75
56	55.25	57.25	59.25	60.75
58	57.00	59.50	61.50	62.75
60	60.00	61.50	63.50	64.75

150#

Size NPS	Inner Ring[1]	Sealing Element		Outer Ring
	Inside (A) Diameter	Inside (B) Diameter	Outside (C) Diameter	Outside (D) Diameter
22*	—	22.75	24.00	26.00
26	25.75	26.50	27.75	30.50
28	27.75	28.50	29.75	32.75
30	29.75	30.50	31.75	34.75
32	31.75	32.50	33.88	37.00
34	33.75	34.50	35.88	39.00
36	35.75	36.50	38.13	41.26
38	37.75	38.50	40.13	43.75
40	39.75	40.50	42.13	45.75
42	41.75	42.50	44.25	48.00
44	43.75	44.50	46.38	50.25
46	45.75	46.50	48.38	52.25
48	47.75	48.50	50.38	54.50
50	49.75	50.50	52.50	56.50
52	51.75	52.50	54.50	58.75
54	53.50	54.50	56.50	61.00
56	55.50	56.50	58.50	63.25
58	57.50	58.50	60.50	65.50
60	59.50	60.50	62.50	67.50

400#

Size NPS	Inner Ring[1]	Sealing Element		Outer Ring
	Inside (A) Diameter	Inside (B) Diameter	Outside (C) Diameter	Outside (D) Diameter
22*	—	22.75	24.75	27.63
26	26.00	27.00	29.00	32.75
28	28.00	29.00	31.00	35.13
30	29.75	31.25	33.25	37.25
32	32.00	33.50	35.50	39.50
34	34.00	35.50	37.50	41.50
36	36.13	37.63	39.63	44.00
38	37.50	38.25	40.25	42.25
40	39.38	40.38	42.38	43.38
42	41.38	42.38	44.38	46.38
44	43.50	44.50	46.50	48.50
46	46.00	47.00	49.00	50.75
48	47.50	49.00	51.00	53.00
50	49.50	51.00	53.00	55.25
52	51.50	53.00	55.00	57.25
54	53.25	55.25	57.25	59.75
56	55.25	57.25	59.25	61.75
58	57.25	59.25	61.25	63.75
60	59.75	61.75	63.75	66.25

* Dimensions for 22" from MSS SP-44; this size is not listed in ASME B 16.47

Styles RW, RWI Dimensions 22" to 60" Series A Flanges

ASME B16.20 GASKETS FOR ASME B16.47 SERIES A FLANGES (MSS SP-44)

600#

Size NPS	Inner Ring[1]	Sealing Element		Outer Ring
	Inside (A) Diameter	Inside (B) Diameter	Outside (C) Diameter	Outside (D) Diameter
22*	—	22.75	24.75	28.88
26	25.50	27.00	29.00	34.13
28	27.50	29.00	31.00	36.00
30	29.75	31.25	33.25	38.25
32	32.00	33.50	35.50	40.25
34	34.00	35.50	37.50	42.25
36	36.13	37.63	39.63	44.50
38	37.50	39.00	41.00	43.50
40	39.75	41.25	43.25	45.50
42	42.00	43.50	45.50	48.00
44	43.75	45.75	47.75	50.00
46	45.75	47.75	49.75	52.25
48	48.00	50.00	52.00	54.75
50	50.00	52.00	54.00	57.00
52	52.00	54.00	56.00	59.00
54	54.25	56.25	58.25	61.25
56	56.25	58.25	60.25	63.50
58	58.00	60.50	62.50	65.50
60	60.25	62.75	64.75	68.25

900#

Size NPS	Inner Ring[1]	Sealing Element		Outer Ring
	Inside (A) Diameter	Inside (B) Diameter	Outside (C) Diameter	Outside (D) Diameter
22*	—	24.25	27.00	33.00
26	26.00	27.00	29.00	34.75
28	28.00	29.00	31.00	37.25
30	30.25	31.25	33.25	39.75
32	32.00	33.50	35.50	42.25
34	34.00	35.50	37.50	44.75
36	36.25	37.75	39.75	47.25
38	39.75	40.75	42.75	47.25
40	41.75	43.25	45.25	49.25
42	43.75	45.25	47.25	51.25
44	45.50	47.50	49.50	53.88
46	48.00	50.00	52.00	56.50
48	50.00	52.00	54.00	58.50

* Dimensions for 22" from MSS SP-44; this size is not listed in ASME B 16.47

NOTES:

1. Inner rings are recommended for all graphite filled gaskets, required for all PTFE filled gaskets, and for NPS 24 and larger in Class 900#, NPS 12 and larger in Class 1500#, and NPS 4 and larger in Class 2500#.
2. The gasket inside Diameter tolerance for NPS 26 through NPS 34 is ±0.03"; for NPS 36 through NPS 60 is ±0.05".
3. The gasket outside Diameter tolerance for NPS 26 through NPS 60 is ±0.06".
4. There are no Class 900# flanges in NPS 50 and larger.

WARNING:

Properties/applications shown throughout this brochure are typical. Your specific application should not be undertaken without independent study and evaluation for suitability. For specific application recommendations consult Garlock. Failure to select the proper sealing products could result in property damage and/or serious personal injury.

Performance data published in this brochure has been developed from field testing, customer field reports and/or in-house testing.

While the utmost care has been used in compiling this brochure, we assume no responsibility for errors. Specifications subject to change without notice. This edition cancels all previous issues. Subject to change without notice.

Styles RW, RWI Dimensions 26" to 60" Series B Flanges

ASME B16.20 GASKETS FOR ASME B16.47 SERIES B FLANGES (API-605)

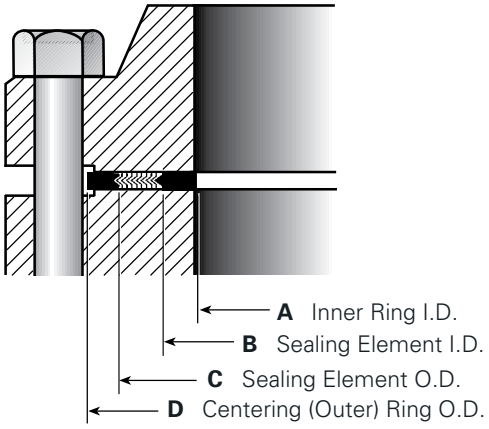

150#

Size NPS	Inner Ring[1]	Sealing Element		Outer Ring
	Inside (A) Diameter	Inside (B) Diameter	Outside (C) Diameter	Outside (D) Diameter
26	25.75	26.50	27.50	28.56
28	27.75	28.50	29.50	30.56
30	29.75	30.50	31.50	32.56
32	31.75	32.50	33.50	34.69
34	33.75	34.50	35.75	36.81
36	35.75	36.50	37.75	38.88
38	37.75	38.37	39.75	41.13
40	39.75	40.25	41.88	43.13
42	41.75	42.50	43.88	45.13
44	43.75	44.25	45.88	47.13
46	45.75	46.50	48.19	49.44
48	47.75	48.50	50.00	51.44
50	49.75	50.50	52.19	53.44
52	51.75	52.50	54.19	55.44
54	53.75	54.50	56.00	57.63
56	56.00	56.88	58.18	59.63
58	58.19	59.07	60.19	62.19
60	60.44	61.31	62.44	64.19

75# | LARGE DIAMETER WELD NECK FLANGES

Size NPS	Sealing Element		Outer Ring
	Inside (B) Diameter	Outside (C) Diameter	Outside (D) Diameter
26	26.25	27.00	27.88
28	28.25	29.13	29.88
30	30.25	31.13	31.88
32	32.25	33.13	33.88
34	34.25	35.13	35.88
36	36.25	37.25	38.31
38	38.25	39.31	40.31
40	40.25	41.31	42.31
42	42.25	43.25	44.31
44	44.25	45.50	46.50
46	46.25	47.50	48.50
48	48.38	49.50	50.50
50	50.25	51.50	52.50
52	52.38	53.63	54.63
54	54.38	55.63	56.63
56	56.50	57.88	58.88
58	58.50	59.88	60.88
60	60.50	61.75	62.88

300#

Size NPS	Inner Ring[1]	Sealing Element		Outer Ring
	Inside (A) Diameter	Inside (B) Diameter	Outside (C) Diameter	Outside (D) Diameter
26	25.75	26.50	28.00	30.38
28	27.75	28.50	30.00	32.50
30	29.75	30.50	32.00	34.88
32	31.75	32.50	34.00	37.00
34	33.75	34.50	36.00	39.13
36	35.75	36.50	38.00	41.25
38	38.25	39.75	41.25	43.25
40	40.25	41.75	43.25	45.25
42	42.75	43.75	45.25	47.25
44	44.25	45.75	47.25	49.25
46	46.38	47.88	49.38	51.88
48	48.50	49.75	51.63	53.88
50	49.88	51.88	53.38	55.88
52	51.88	53.88	55.38	57.88
54	53.75	55.25	57.25	60.25
56	56.25	58.25	60.00	62.75
58	58.44	60.44	61.94	65.19
60	61.31	62.56	64.19	67.19

Styles RW, RWI Dimensions 26" to 60" Series B Flanges

ASME B16.20 GASKETS FOR ASME B16.47 SERIES B FLANGES (API-605)

400#

Size NPS	Inner Ring[1]	Sealing Element		Outer Ring
	Inside (A) Diameter	Inside (B) Diameter	Outside (C) Diameter	Outside (D) Diameter
26	25.75	26.25	27.50	29.38
28	27.63	28.13	29.50	31.50
30	29.63	30.13	31.75	33.75
32	31.50	32.00	33.88	35.88
34	33.50	34.13	35.88	37.88
36	35.38	36.13	38.00	40.25
38	37.50	38.25	40.25	42.25
40	39.38	40.38	42.38	44.38
42	41.38	42.38	44.38	46.38
44	43.50	44.50	46.50	48.50
46	46.00	47.00	49.00	50.75
48	47.50	49.00	51.00	53.00
50	49.50	51.00	53.00	55.25
52	51.50	53.00	55.00	57.25
54	53.25	55.25	57.25	59.75
56	55.25	57.25	59.25	61.75
58	57.25	59.25	61.25	63.75
60	59.75	61.75	63.75	66.25

600#

Size NPS	Inner Ring[1]	Sealing Element		Outer Ring
	Inside (A) Diameter	Inside (B) Diameter	Outside (C) Diameter	Outside (D) Diameter
26	25.38	26.13	28.13	30.13
28	27.25	27.75	29.75	32.25
30	29.63	30.63	32.63	34.63
32	31.25	32.75	34.75	36.75
34	33.50	35.00	37.00	39.25
36	35.50	37.00	39.00	41.25
38	37.50	39.00	41.00	43.50
40	39.75	41.25	43.25	45.50
42	42.00	43.50	45.50	48.00
44	43.75	45.75	47.75	50.00
46	45.75	47.75	49.75	52.25
48	48.00	50.00	52.00	54.75
50	50.00	52.00	54.00	57.00
52	52.00	54.00	56.00	59.00
54	54.25	56.25	58.25	61.25
56	56.25	58.25	60.25	63.50
58	58.00	60.50	62.50	65.50
60	60.25	62.75	64.75	68.25

900#

Size NPS	Inner Ring[1]	Sealing Element		Outer Ring
	Inside (A) Diameter	Inside (B) Diameter	Outside (C) Diameter	Outside (D) Diameter
26	26.25	27.25	29.50	33.00
28	28.25	29.25	31.50	35.50
30	30.75	31.75	33.75	37.75
32	33.00	34.00	36.00	40.00
34	35.25	36.25	38.25	42.25
36	36.25	37.25	39.25	44.25
38	39.75	40.75	42.75	47.25
40	41.75	43.25	45.25	49.25
42	43.75	45.25	47.25	51.25
44	45.50	47.50	49.50	53.88
46	48.00	50.00	52.00	56.50
48	50.00	52.00	54.00	58.50

NOTES:

1. Inner rings are recommended for all graphite filled gaskets, required for all PTFE filled gaskets, and for NPS 24 and larger in Class 900#, NPS 12 and larger in Class 1500#, and NPS 4 and larger in Class 2500#.
2. The gasket inside Diameter tolerance for NPS 26 through NPS 34 is ±0.03"; for NPS 36 through NPS 60 is ±0.05".
3. The gasket outside Diameter tolerance for NPS 26 through NPS 60 is ±0.06".
4. There are no Class 900# flanges in NPS 50 and larger.

WARNING:

Properties/applications shown throughout this brochure are typical. Your specific application should not be undertaken without independent study and evaluation for suitability. For specific application recommendations consult Garlock. Failure to select the proper sealing products could result in property damage and/or serious personal injury.

Performance data published in this brochure has been developed from field testing, customer field reports and/or in-house testing.

While the utmost care has been used in compiling this brochure, we assume no responsibility for errors. Specifications subject to change without notice. This edition cancels all previous issues. Subject to change without notice.

Styles RW Dimensions
Taylor Forge Flanges, 26-96"

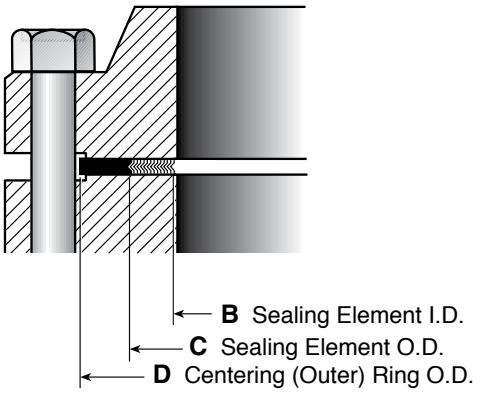

75# | SLIP-ON AND BLIND

Size NPS	Sealing Element		Outer Ring
	Inside (B) Diameter	Outside (C) Diameter	Outside (D) Diameter
26	27.00	28.25	30.13
28	29.00	30.25	32.13
30	31.00	32.25	34.13
32	33.13	34.38	36.38
34	35.13	36.50	38.38
36	37.13	38.50	40.38
42	43.25	44.75	46.63
48	49.25	50.88	52.63
54	55.38	57.75	59.13
60	61.38	63.38	65.13
66	67.50	69.50	71.75
72	73.50	75.50	77.75

75# | WELD NECK AND BLIND

Size NPS	Sealing Element		Outer Ring
	Inside (B) Diameter	Outside (C) Diameter	Outside (D) Diameter
26	26.50	27.75	28.75
28	28.50	29.75	30.75
30	30.50	31.75	32.75
32	32.50	33.75	35.13
34	34.50	35.88	37.13
36	36.50	37.88	39.13
42	42.50	44.00	45.63
48	48.50	50.13	51.63
54	54.50	56.38	57.88
60	60.50	62.50	63.88
66	66.50	68.50	70.25
72	72.50	74.50	76.25

125#

Size NPS	Sealing Element		Outer Ring
	Inside (B) Diameter	Outside (C) Diameter	Outside (D) Diameter
22	22.75	24.00	26.00
26	26.50	27.75	30.50
28	28.50	29.75	32.75
30	30.50	31.75	34.75
32	32.50	33.88	37.00
34	34.50	35.88	39.00
36	36.50	38.13	41.25
38	38.50	40.13	43.75
40	40.50	42.13	45.75
42	42.50	44.25	48.00
44	44.50	46.38	50.25
46	46.50	48.38	52.25
48	48.50	50.38	54.50
50	50.50	52.50	56.50
52	52.50	54.50	58.75
54	54.50	56.50	61.00
60	60.50	62.50	67.50
66	71.00	72.75	74.25
72	77.50	79.25	80.75
84	90.25	92.00	93.50
96	103.00	104.75	106.25

Styles RW Dimensions
Taylor Forge Flanges, 26-96"

175#

Size NPS	Sealing Element		Outer Ring
	Inside (B) Diameter	Outside (C) Diameter	Outside (D) Diameter
26	26.50	27.75	29.13
28	28.50	29.75	31.13
30	30.50	31.75	33.38
32	32.50	33.75	35.38
34	34.50	35.88	37.50
36	36.50	37.88	39.50
38	38.50	39.88	41.50
40	40.50	42.00	43.50
42	42.50	44.00	45.88
44	44.50	46.00	47.88
46	46.50	48.00	49.88
48	48.50	50.13	51.88
50	50.50	52.25	53.88
52	52.50	54.38	56.13
54	54.50	56.75	58.13
60	60.50	62.50	64.13
66	67.88	68.88	70.13
72	73.38	75.13	76.63
84	87.00	88.75	90.25
96	99.00	100.75	102.25

250#

Size NPS	Sealing Element		Outer Ring
	Inside (B) Diameter	Outside (C) Diameter	Outside (D) Diameter
26	26.50	27.75	32.75
28	28.50	29.75	35.25
30	30.50	31.75	37.50
32	32.50	33.88	39.75
34	34.50	35.88	41.75
36	36.50	38.13	44.00
38	38.50	40.13	46.00
40	40.50	42.13	48.25
42	42.50	44.25	50.75
44	44.50	46.38	53.00
46	46.50	48.38	55.25
48	48.50	50.38	58.75

350#

Size NPS	Sealing Element		Outer Ring
	Inside (B) Diameter	Outside (C) Diameter	Outside (D) Diameter
26	26.50	27.75	29.63
28	28.50	29.75	31.63
30	30.50	31.75	33.88
32	32.50	33.88	35.88
34	34.50	35.88	37.88
36	36.50	38.13	40.38
38	38.50	40.13	42.38
40	40.50	42.13	44.38
42	42.50	44.25	46.63
44	44.50	46.38	49.00
46	46.50	48.38	51.00
48	48.50	50.38	53.00
52	52.50	54.50	57.38
54	54.50	56.50	59.38
60	60.50	62.50	65.38
66	66.50	68.50	72.50
72	72.25	77.00	78.50
84	88.38	90.13	91.63
96	100.75	102.50	104.00

WARNING:

Properties/applications shown throughout this brochure are typical. Your specific application should not be undertaken without independent study and evaluation for suitability. For specific application recommendations consult Garlock. Failure to select the proper sealing products could result in property damage and/or serious personal injury.

Performance data published in this brochure has been developed from field testing, customer field reports and/or in-house testing.

While the utmost care has been used in compiling this brochure, we assume no responsibility for errors. Specifications subject to change without notice. This edition cancels all previous issues. Subject to change without notice.

Corrugated Metal Gasket Dimensions

GASKET DIMENSIONS

ASME / ANSI B16.5 Flanges to ASME B16.21-2011

Nominal Pipe Size		Gasket Contact Width W [1]		Gasket Inside Diameter [3]		Gasket Outside Diameter [2] Flange Pressure Class (lb)			
						Class 150		Class 300	
inch	mm	inch	mm	inch	mm	inch	mm	inch	mm
1/2	12.7	0.27	6.9	27/32	21.4	1-7/8	47.6	2-1/8	54.0
3/4	19.1	0.31	7.9	1-1/16	27.0	2-1/4	57.2	2-5/8	66.7
1	25.4	0.34	8.6	1-5/16	33.3	2-5/8	66.7	2-7/8	73.0
1-1/4	31.8	0.42	10.7	1-21/32	42.1	3	76.2	3-1/4	82.6
1-1/2	38.1	0.48	12.2	1-29/32	48.4	3-3/8	85.7	3-3/4	95.3
2	50.8	0.62	15.7	2-3/8	60.3	4-1/8	104.8	4-3/8	111.1
2-1/2	63.5	0.62	15.7	2-7/8	73.0	4-7/8	123.8	5-1/8	130.2
3	76.2	0.75	19.1	3-1/2	88.9	5-3/8	136.5	5-7/8	149.2
3-1/2	88.9	0.75	19.1	4	101.6	6-3/8	161.9	6-1/2	165.1
4	101.6	0.84	21.3	4-1/2	114.3	6-7/8	174.6	7-1/8	181.0
5	127.0	0.88	22.4	5-9/16	141.3	7-3/4	196.9	8-1/2	215.9
6	152.4	0.94	23.9	6-5/8	168.3	8-3/4	222.3	9-7/8	250.8
8	203.2	1.00	25.4	8-5/8	219.1	11	279.4	12-1/8	308.0
10	254.0	1.00	25.4	10-3/4	273.1	13-3/8	339.7	14-1/4	362.0
12	304.8	1.12	28.4	12-3/4	323.9	16-1/8	409.6	16-5/8	422.3
14	355.6	1.12	28.4	14	355.6	17-3/4	450.9	19-1/8	485.8
16	406.4	1.25	31.8	16	406.4	20-1/4	514.4	21-1/4	539.8
18	457.2	1.50	38.1	18	457.2	21-5/8	549.3	23-1/2	596.9
20	508.0	1.50	38.1	20	508.0	23-7/8	606.4	25-3/4	654.1
24	609.6	1.62	41.1	24	609.6	28-1/4	717.6	30-1/2	774.7

WARNING:

Properties/applications shown throughout this brochure are typical. Your specific application should not be undertaken without independent study and evaluation for suitability. For specific application recommendations consult Garlock. Failure to select the proper sealing products could result in property damage and/or serious personal injury.

Performance data published in this brochure has been developed from field testing, customer field reports and/or in-house testing.

While the utmost care has been used in compiling this brochure, we assume no responsibility for errors. Specifications subject to change without notice. This edition cancels all previous issues. Subject to change without notice.

GARLOCK is a registered trademark for, seals, gaskets, and other products of Garlock.

© Garlock 2026. All rights reserved worldwide.

Tel: 1-800-448-6688
www.garlock.com

Garlock®
An ENPRO Company